

Legend plate mount, without plate

Part no. M22S-STDD-X
Article no. 216394
Catalog No. M22S-STDD-XQ

Delivery programme

Product range		RMQ-Titan (drilling dimensions 22.5 mm)
Basic function		Accessories
Basic function accessories		Legend holder
Single unit/Complete unit		Single unit
		Without label
Width	mm	30
Height	mm	75
Design		Round
Colour		
		Black
RAL Value		RAL 9005
		
Protection type		IP66
For use with		for double actuators
Connection to SmartWire-DT		no

Approvals

North America Certification	UL/CSA certification not required

Technical data ETIM 5.0

Low-voltage industrial components (EG000017) / Text plate holder for control circuit devices (EC001032)
Electric engineering, automation, process control engineering / Low-voltage switch technology / Command and alarm device / Sign carrier for command devices (ecl@ss8-27-37-12-29 [AKF047010])

Width	mm	30
Height	mm	50
Hole diameter	mm	22
Width opening	mm	22
Height meter opening	mm	0
Colour		Black
Shape		Rectangular

Dimensions

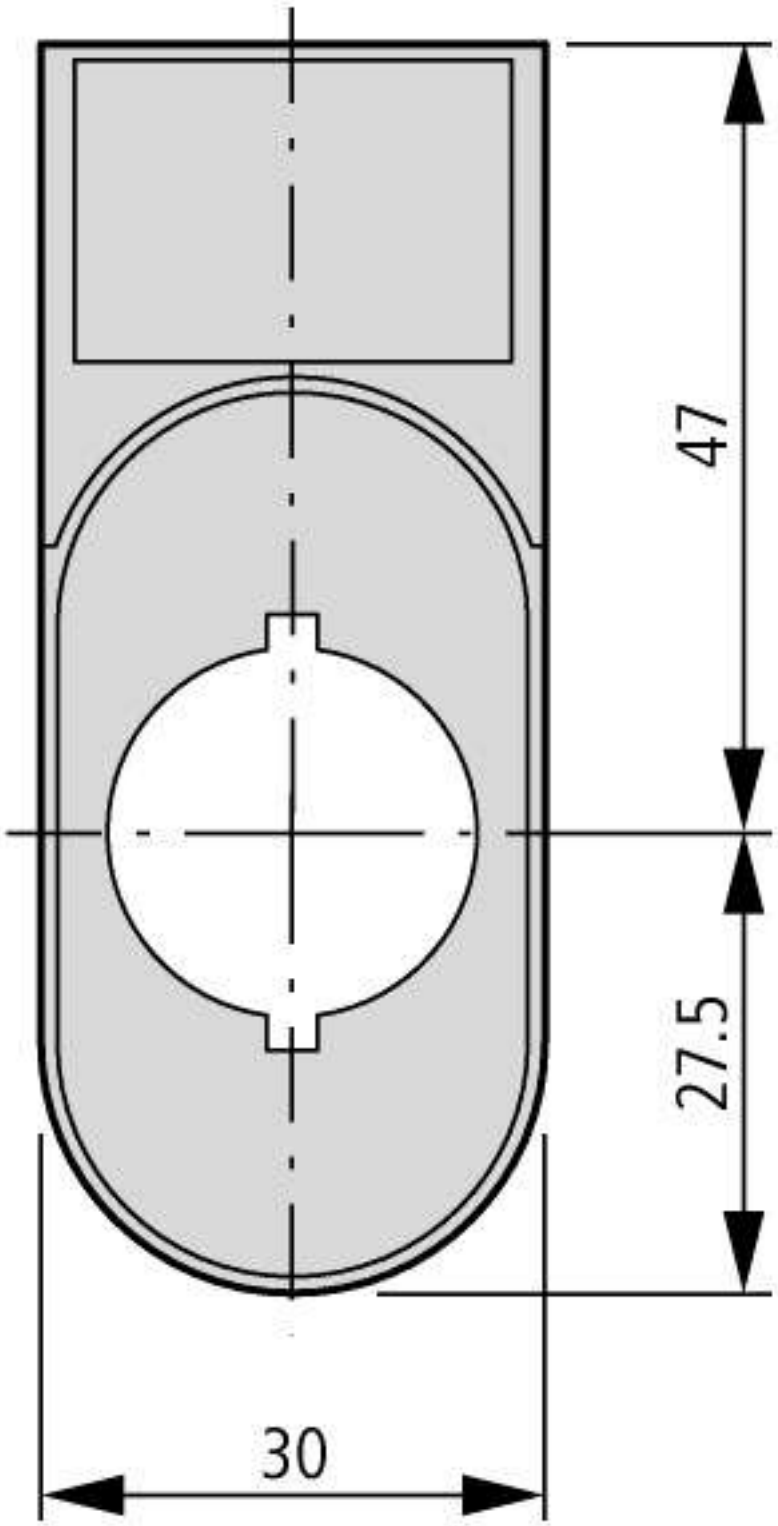
47
27.5
30

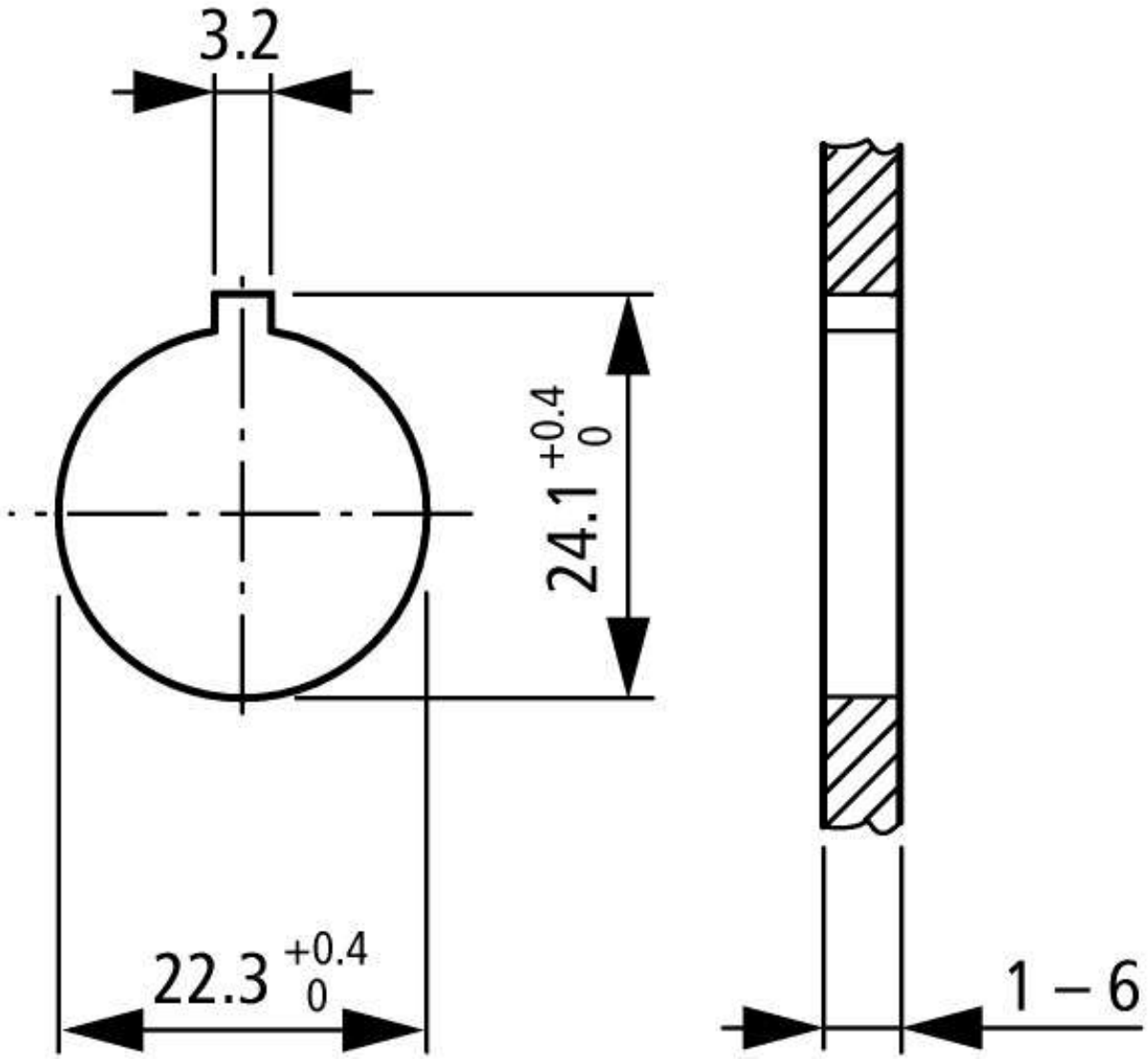

Mounting hole with lug slot
Actuating and indicator elements

Additional product information (links)

IL04716002Z (AWA1160-1745) RMQ-Titan System	
IL04716002Z (AWA1160-1745) RMQ-Titan System	ftp://ftp.moeller.net/DOCUMENTATION/AWA_INSTRUCTIONS/IL04716002Z2013_08.pdf

© 11/2013 by Eaton Industries GmbH