

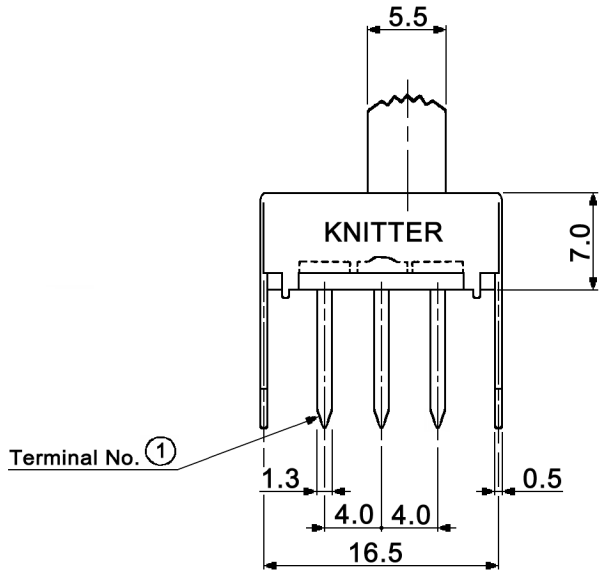

HOLE LAYOUT ⊕ 0.05

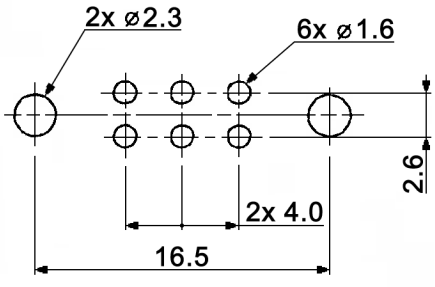

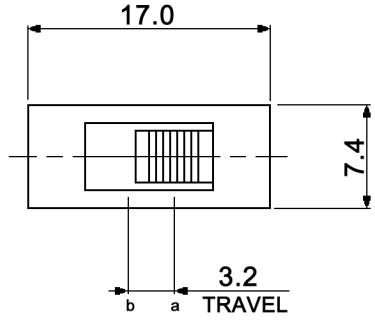

CIRCUIT DIAGRAM
C: COMMON PIN
BOTTOM VIEW

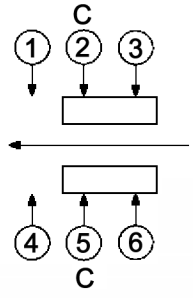

non-shorting

Specifications:

Contact rating:	0.3A, 30V DC
Contact resistance:	30mOhm max.
Insulation resistance:	100MOhm min. at 500V DC for 1 minute
Dielectric strength:	500V AC (50/60Hz, 2mA) for 1 minute
Operating temperature:	-20°C to +85°C
Mechanical life:	10 000 cycles
Operating force:	250 +/-100gf
Soldering conditions:	no pre-heat
	wave soldering: 260 +/-5°C, 5 +/-1sec.
Material:	Terminal: brass strip, silver plated
	Base: phenolic resin, natural
	Contact plate: brass strip, silver plated
	Spring: SWC, temper
	Frame: steel, nickel plated
	Slider: POM, black

RoHS-conform 2002/95/EC

Tolerances: up to 10: ±0.2mm above 10-50: ±0.3mm			Date	Name	MFP 201 N	
			02/11	dr		
			knitter-switch		30 23 01	Page 1/1
Modifications	Date	Name				