Product data sheet
Characteristics

XCKJ10511D
limit switch XCKJ - thermoplastic roller lever - 1NC+1NO - snap action - M12



Main

Range of product	OsiSense XC
Series name	Standard format
Product or component type	Limit switch
Device short name	XCKJ
Sensor design	Form A conforming to CENELEC EN 50041
Body type	Fixed
Head type	Rotary head
Material	Metal
Body material	Zamak
Head material	Zamak
Fixing mode	By the body
Movement of operating head	Rotary
Type of operator	Spring return roller lever thermoplastic
Type of approach	Lateral approach, 1 or 2 programmable direction
Number of poles	2
Contacts type and composition	1 NC + 1 NO
Contact operation	Snap action

Complementary

Switch actuation	By 30° cam
Electrical connection	Male connector M12, 5 pins
Contacts insulation form	Zb
Number of steps	1
Positive opening	With
Positive opening minimum torque	0.5 N.m
Minimum torque for tripping	0.25 N.m
Maximum actuation speed	1.5 m/s

Disclaimer: This documentation is not intended as a substitute for and is not to be used for determining suitability or reliability of these products for specific user applications

[Ie] rated operational current	0.27 A at 50 V, DC-13 conforming to EN/IEC 60947-5-1 appendix A 3 A at 50 V, AC-15 conforming to EN/IEC 60947-5-1 appendix A
[Ithe] conventional enclosed thermal current	4 A
[Ui] rated insulation voltage	60 V (pollution degree 3) conforming to IEC 60947-1
Maximum resistance across terminals	25 MOhm conforming to IEC 60255-7 category 3
[Uimp] rated impulse withstand voltage	0.8 kV IEC 60664 0.8 kV IEC 60947-1
Short-circuit protection	4 A cartridge fuse, type gG
Electrical durability	5000000 cycles, DC-13, inductive load type, 24 V, 10 W, operating rate <60 cyc/mn, load factor: 0.5 conforming to IEC 60947-5-1 appendix C 5000000 cycles, DC-13, inductive load type, 48 V, 7 W, operating rate <60 cyc/mn, load factor: 0.5 conforming to IEC 60947-5-1 appendix C
Mechanical durability	30000000 cycles
Width	40 mm
Height	89 mm
Depth	44 mm
Net weight	0.48 kg
Terminals description ISO n°1	(13-14)NO (21-22)NC

Environment

Shock resistance	50 gn for 11 ms conforming to IEC 60068-2-27
Vibration resistance	25 gn (f= 10…500 Hz) conforming to IEC 60068-2-6
IP degree of protection	IP66 conforming to IEC 60529
IK degree of protection	IK07 conforming to EN 50102
Overvoltage category	Class I conforming to IEC 61140 Class I conforming to NF C 20-030
Ambient air temperature for operation	-25…70 °C
Ambient air temperature for storage	-40…70 °C
Protective treatment	TC
Product certifications	CCC CSA UL
Standards	EN 60204-1 IEC 60204-1 UL 508 IEC 60947-5-1 CSA C22.2 No 14 EN 60947-5-1 CENELEC EN 50041

Offer Sustainability

Sustainable offer status	Green Premium product
REACh Regulation	REACh Declaration
EU RoHS Directive	Pro-active compliance (Product out of EU RoHS legal scope) EU RoHS Declaration
Mercury free	Yes
RoHS exemption information	Yes
Environmental Disclosure	Product Environmental Profile
Circularity Profile	No need of specific recycling operations

Contractual warranty

Warranty	18 months

XCKJ10511D

Dimensions

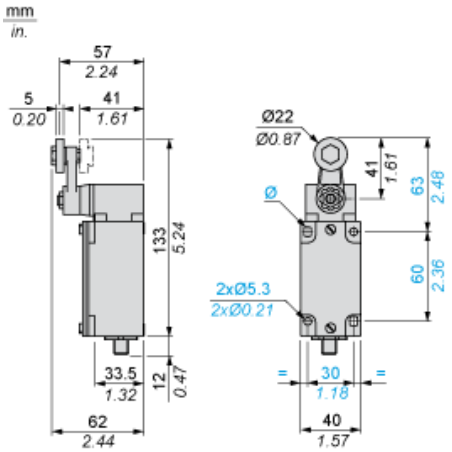

Mounting with Cable Entry

Position of Cable Gland

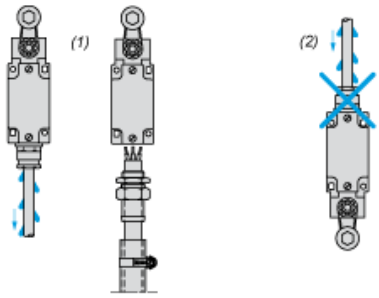

(1) Recommended
(2) To be avoided

Mounting with Rotary Heads and Levers

Type of Cam

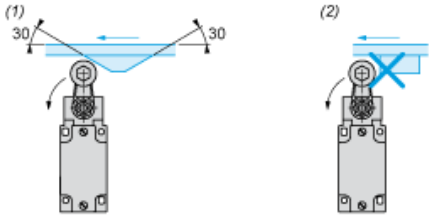

(1) Recommended
(2) To be avoided

Setting-up with Lever Head

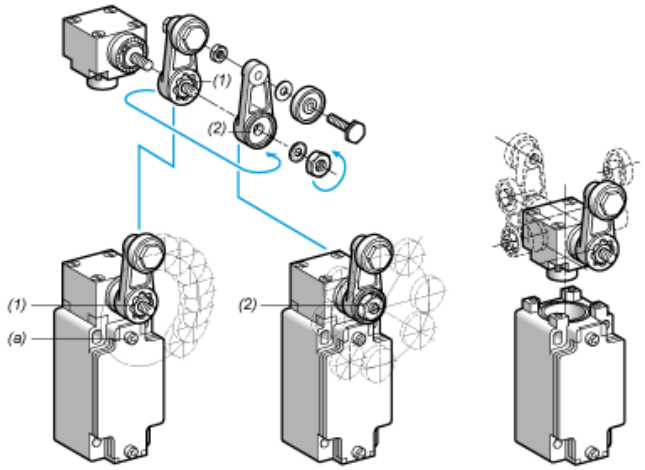

(1) 5° steps throughout 360° / Tightening torque (Min : 1) (Max : 1.5)
(2) 45° steps throughout 360° / Tightening torque (Min : 1) (Max : 1.5)
(a) Tightening torque (Min : 1) (Max : 1.5)

Setting-up with Head ZCKE05

Direction of Actuation Programming

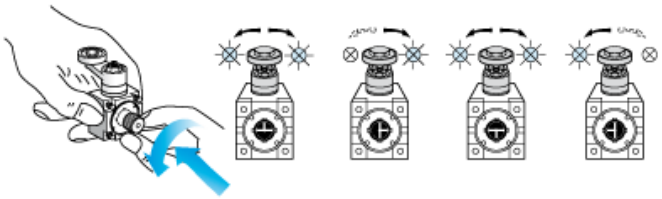

Wiring Diagram

2-pole NC + NO Snap Action

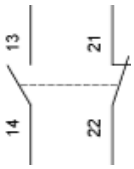

Wiring Diagram

Connections

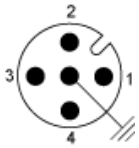

1-2 : NC
3-4 : NO

Characteristics of Actuation

Switch Actuation on End

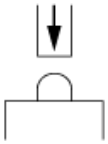

Functionnal Diagram

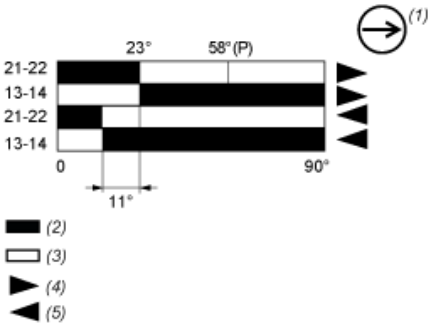

(P) Positive opening point
(1) NC contact with positive opening operation
(2) Closed
(3) Open
(4) Tripping
(5) Resetting