SRX enclosures
General characteristics and applications

2

The AISI 304 stainless steel used allows the cabinets to be installed either indoors or outdoors, by fixing to the floor or a wall. AISI 304 stainless steel enclosures with blind door, usually intended for making enclosures for automation, are supplied with the galvanised sheet metal internal plate and do not have cable entry flanges.

SRX enclosures always conform to IEC EN 62208 and to IEC 61439-1-2, have a degree of protection IP66 (IEC EN 60529) and NEMA 4X (UL standard). The degree of protection against external mechanical impacts is IK10 for the version with blind door and IK09 for the version with glass door (IEC 62262).
AISI 304 stainless steel enclosures with glass door can also be used for distribution configurations. Alternatively, the internal equipment is made by selecting special kits (Distribution Kit) consisting of a pair of functional uprights for assembly of the AISI 304 stainless steel modular panels (to be ordered separately) and any compensation panels. The modular panels, which can also be installed on the enclosures with blind door using the same KD Kit....X, are all hinged and have vertical modularity of 185 mm.



SRX enclosures can be equipped with: standard plates, clip nuts, spacers, slotted internal plate, accessories for stacking, DIN rails and fixing brackets, shaped sections for accessories on doors, closing systems.



Spray protection roof

Improves protection against infiltration by liquids and accidental sprays. Made of AISI 304 stainless steel.



Distribution kit

All apparatuses and modular circuit breakers can be installed on a DIN rail combined with a modular panel.



Stacking

SRX enclosures can be stacked using the special kit. The plinth with removable flanges is made of 25/10 thick AISI 304 stainless steel.



Closing box

A new Ø19mm closing box made of chrome-finished plastic with double tongue key.

Technical characteristics

Conforms to	CEI EN 62208, CEI EN 60439-1, IEC 61439-1-2
Degree of protection	IP66 (CEI EN 60529)* NEMA 4X (UL standard)*
Degree of mechanical protection	IK10 blind door
	IK09 glass door
	(IEC 62262)
Certifications	UL LISTED Ex II 3 G D
Type of material	AISI 304
Installation site	indoors/outdoors
Fixing method	floor/wall
Normal operating conditions - ambient temperature	from –25 to +55°C

* Under certification.

SRX enclosures
Selection of the structure

Rapid selection table

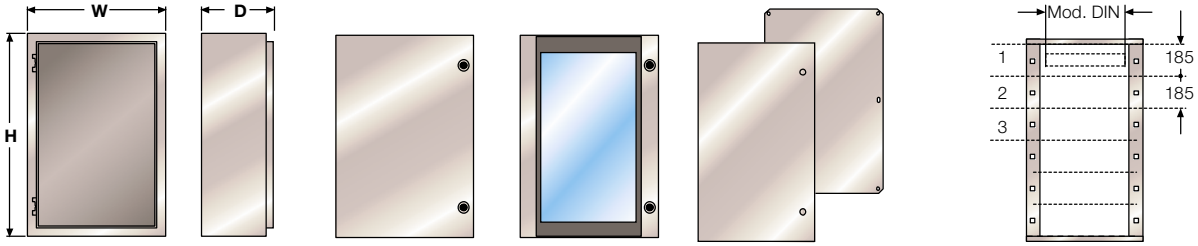

Overall dimensions			Enclosures with blind door + mounting plate	Enclosures with glass door[1]	Automation kit		Distribution kit Supports for mounting modular panels			
H mm	W mm	D mm			Blind inner door IP20	Blind plate	No. of vertical mod. H=185mm	No. of DIN mod. per row	Total modules	DIN supports
300	200	150	**SRN3215X**			**PF3020**				
	400	150	**SRN3415X**			**PF3040**				
400	300	150	**SRN4315X**		**KC4030X**	**PF4030**				
		200	**SRN4320X**							
	400	200	**SRN4420X**			**PF4040**				
	600	200	**SRN4620X**			**PF4060**				
500	400	200	**SRN5420X**	**SRN5420VX**	**KC5040X**	**PF5040**	2	14	28	**KD5040X**
	500	200	**SRN5520X**			**PF5050**				
600	400	200	**SRN6420X**	**SRN6420VX**	**KC6040X**	**PF6040**	3	14	42	**KD6040X**
	600	200	**SRN6620X**			**PF6060**				
		300	**SRN6630X**							
700	500	250	**SRN7525X**	**SRN7525VX**	**KC7050X**	**PF7050**				
800	600	200	**SRN8620X**		**KC8060X**	**PF8060**	4	25	100	**KD8060X**
		250		**SRN8625VX**				25	100	
		300	**SRN8630X**					25	100	
	800	300	**SRN8830X**			**PF8080**				
1000	800	300	**SRN10830X**	**SRN10830VX**	**KC1080X**	**PF1080**	5	36	180	**KD1080X**
1200	600	300	**SRN12630X**			**PF1260**				
	800	300	**SRN12830X**			**PF1280**				

[1] The mounting plate must be ordered separately.

> Selection by components page 2/5 > In-depth technical information page 6/1 > Overall dimensions page 7/1

SRX enclosures
Ordering codes

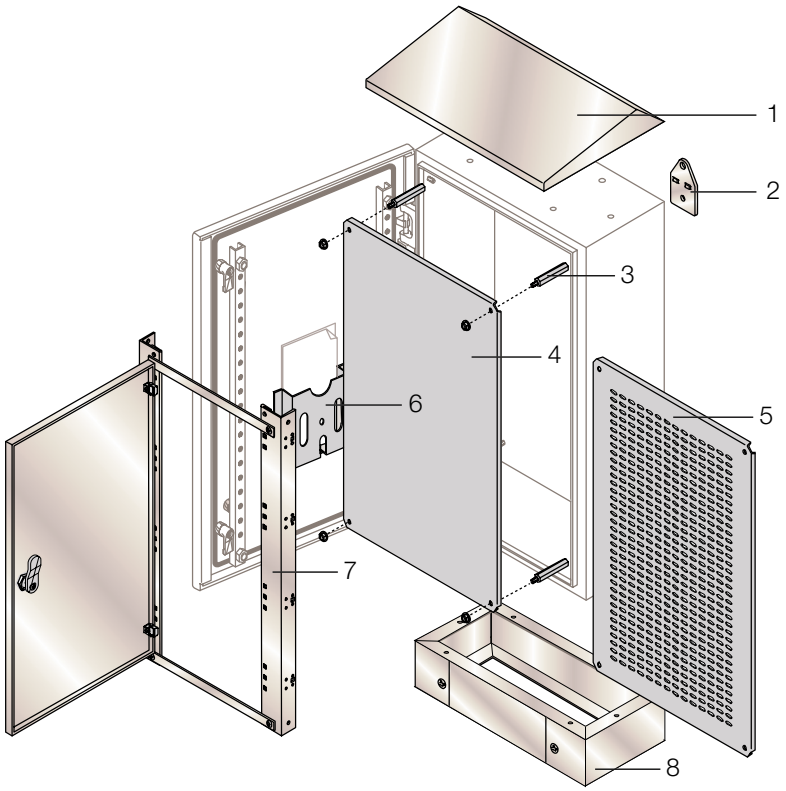

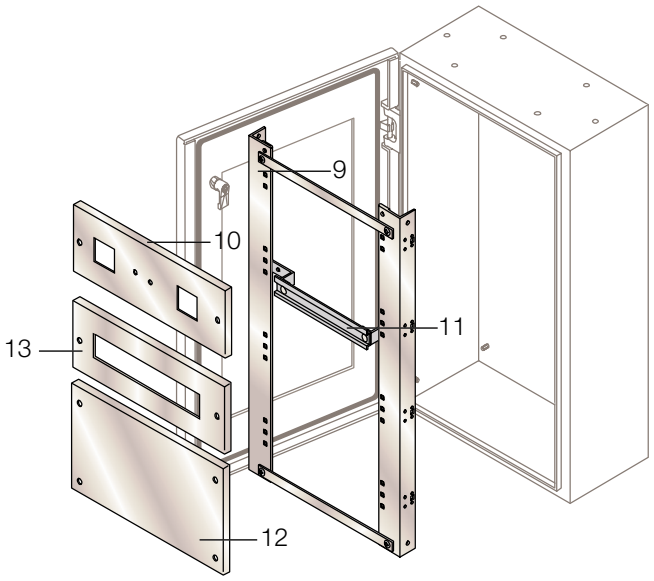

1
Spray protection roof
Page..... 2/12

2
Wall-mounting brackets
Page..... 2/9

3
Spacers for back plates
Page..... 2/8

4
Blind internal plate
Page..... 2/7

5
Slotted internal plate
Page..... 2/8

6
Document pocket
Page..... 5/8

7
Blind inner door
Page..... 2/7

8
Plinth
Page..... 2/10

9
Frame for DIN rail
Page..... 2/10

10
Modular panels for apparateus
Page..... 2/11

11
DIN rail
Page..... 2/12

12
Blind modular panels
Page..... 2/11

13
Modular panel for DIN rail
Page..... 2/11

> Rapid selection table page 2/4 > In-depth technical information page 6/1 > Overall dimensions page 7/1

SRX enclosures
Ordering codes

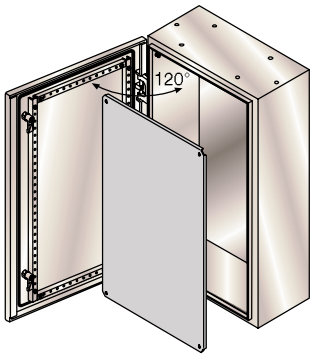

SRX series enclosures with blind door (internal plate included)

Enclosures with an blind door, made of AISI 304 stainless steel, usually intended for producing enclosures for automation, come supplied with the galvanised sheet metal internal plate and do not have cable entry flanges.

Enclosures with blind door complete with internal mounting plate

Dimensions (mm) H	W	D	Code	Item	Price	Package/ No. of pieces
300	200	150	SRN3215X			1/1
	400		SRN3415X			1/1
400	300	150	SRN4315X			1/1
	300	200	SRN4320X			1/1
	400		SRN4420X			1/1
	600		SRN4620X			1/1
500	400	200	SRN5420X			1/1
	500		SRN5520X			1/1
600	400	200	SRN6420X			1/1
	600		SRN6620X			1/1
	600	300	SRN6630X			1/1
700	500	250	SRN7525X			1/1
800	600	200	SRN8620X			1/1
	600	300	SRN8630X			1/1
	800		SRN8830X			1/1
1000	800	300	SRN10830X			1/1
1200	600	300	SRN12630X			1/1
	800		SRN12830X			1/1

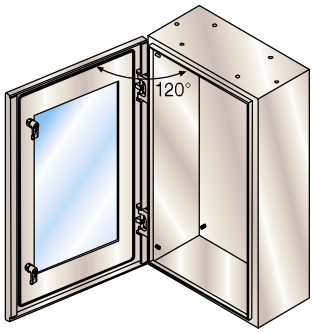

SRX series stainless steel enclosures with glass door

AISI 304 stainless steel enclosures with a glass door can also be used for distribution configurations. The internal equipment is set up using the relevant kits:
- KD...X (Distribution Kit) consisting of a pair of functional uprights for assembly of the modular panels made of AISI 304 stainless steel (to be ordered separately) and of any compensation panels. The modular panels, which can also be installed on the enclosures with blind door using the KD kit, are all hinged and have vertical modularity of 185 mm. SRX enclosures with glass door are provided without mounting plate (to be ordered separately).

Enclosures with glass door

Dimensions (mm) H	W	D	Code	Item	Price	Package/ No. of pieces
500	400	200	SRN5420VX			1/1
600	400		SRN6420VX			1/1
700	500	250	SRN7525VX			1/1
800	600		SRN8625VX			1/1
1000	800	300	SRN10830VX			1/1

> Rapid selection table page 2/4 > In-depth technical information page 6/1 > Overall dimensions page 7/1

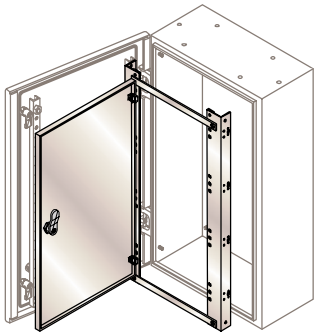

Blind inner door

The inner door guarantees a degree of protection of IP20. Made of 15/10 thick AISI 304 stainless steel, complete with box and double tongue insert.

Blind inner door					
Dimensions (mm)					
H	W	Code	Item	Price	Package/ No. of pieces
400	300	KC4030X			1/1
500	400	KC5040X			1/1
600		KC6040X			1/1
700	500	KC7050X			1/1
800	600	KC8060X			1/1
1000	800	KC1080X			1/1

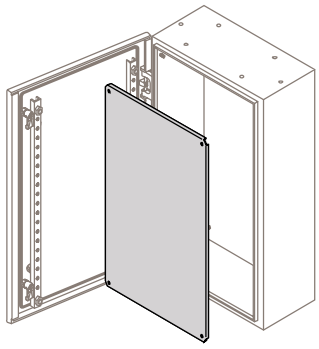

Blind internal mounting plate

20/10 thick galvanised sheet metal internal plate, complete with fixing with small parts supplied. Depth-adjustable using a special spacer kit (to be ordered separately).

Blind internal mounting plate					
Dimensions (mm)					
H	W	Code	Item	Price	Package/ No. of pieces
300	200	PF3020			1/1
300	400	PF3040			1/1
400	300	PF4030			1/1
400	400	PF4040			1/1
400	600	PF4060			1/1
500	400	PF5040			1/1
500	500	PF5050			1/1
600	400	PF6040			1/1
600	600	PF6060			1/1
700	500	PF7050			1/1
800	600	PF8060			1/1
800	800	PF8080			1/1
1000	800	PF1080			1/1
1200	600	PF1260			1/1
1200	800	PF1280			1/1

> Rapid selection table page 2/4 > In-depth technical information page 6/1 > Overall dimensions page 7/1

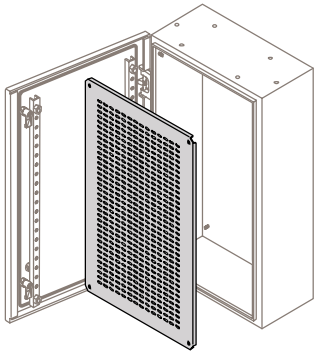

Slotted internal mounting plate

Fixing with small parts supplied. Depth-adjustable using a special spacer kit (to be ordered separately).

Slotted internal mounting plate					
Dimensions (mm)					
H	W	Code	Item	Price	Package/ No. of pieces
300	200	TQ3020			1/1
300	400	TQ3040			1/1
400	300	TQ4030			1/1
400	400	TQ4040			1/1
400	600	TQ4060			1/1
500	400	TQ5040			1/1
600	400	TQ6040			1/1
600	600	TQ6060			1/1
700	500	TQ7050			1/1
800	600	TQ8060			1/1
800	800	TQ8080			1/1
1000	800	TQ1080			1/1
1200	600	TQ1260			1/1
1200	800	TQ1280			1/1

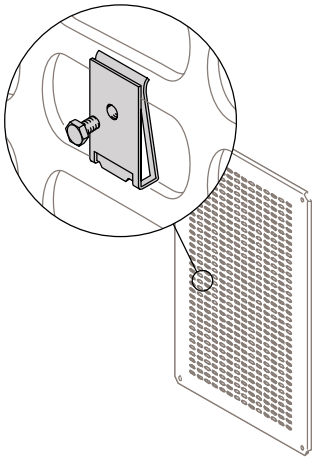

Clip nuts

For slotted plates with M6x10mm hexagonal head screws.

Description	Code	Item	Price	Package/ No. of pieces
Clip nuts	TQ6610			1/20

Spacer kit for adjusting back plate depth

Kit made up of 12 spacers for fixing the mounting plate. Allows depth adjustment in 25 mm steps.

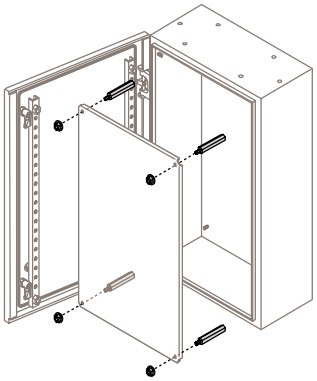

Description	Code	Item	Price	Package/ No. of pieces
Spacers, length 25 mm 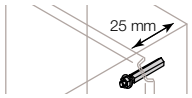	AA8025			1/12
Spacers, length 50 mm 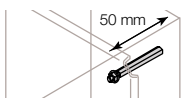	AA8050			1/12

> Rapid selection table page 2/4 > In-depth technical information page 6/1 > Overall dimensions page 7/1

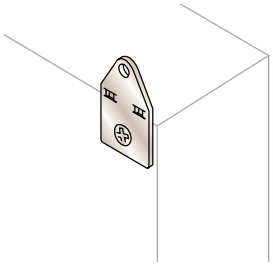

Wall-mounting brackets

Allow enclosures to be wall-mounted and are fitted using the special holes located on the back of the enclosures. Made of 30/10 thick AISI 304 stainless steel.

Description	Code	Item	Price	Package/ No. of pieces
Wall-mounting brackets	AA1206X			1/4

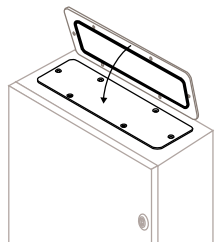

Cable entry flanges

Cable entry flanges in 25/10 thick AISI 304 stainless steel with polyurethane gasket.

Description	Dimensions (mm) W	D	Code	Item	Price	Package/ No. of pieces
Cable entry flange for SRN3215X	200	150	FLN3215X			1/1
Cable entry flange for SRN4315X	300	150	FLN4315X			1/1
Cable entry flange for SRN3415X	400	150	FLN3415X			1/1
Cable entry flange for SRN4320X, SRN4320VX	300	200	FLN4320X			1/1
Cable entry flange for SRN4420X, SRN5420X, SRN6420X, SRN5420VX, SRN6420VX	400	200	FLN4420X			1/1
Cable entry flange 500x200mm for SRN5520X	500	200	FLN5520X			1/1
Cable entry flange) for SRN4620X, SRN6620X, SRN8620X	600	200	FLN4620X			1/1
Cable entry flange for SRN7525X, SRN7525VX	500	250	FLN7525X			1/1
Cable entry flange for SRN8625VX	600	250	FLN8625X			1/1
Cable entry flange for SRN6630X, SRN8630X, SRN12630X	600	300	FLN6630X			1/1
Cable entry flange for SRN8830X, SRN10830X, SRN12830X, SRN10830VX	800	300	FLN6830X			1/1

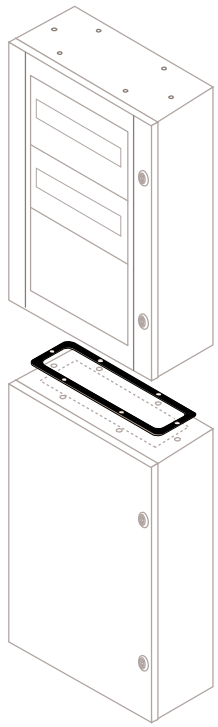

Accessories for stacking

Dimensions (mm) W	D	Code	Item	Price	Package/ No. of pieces
IP65 gasket					
400	200	GZ4020			1/1
	250	GZ4025			1/1
500	200	GZ5020			1/1
	250	GZ5025			1/1
600	200	GZ6020			1/1
	250	GZ6025			1/1
	300	GZ6030			1/1
800	300	GZ8030			1/1

> Rapid selection table page 2/4 > In-depth technical information page 6/1 > Overall dimensions page 7/1

SRX enclosures
Ordering codes

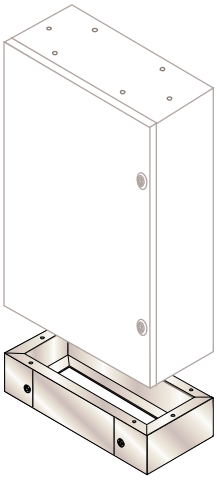

Plinth

25/10 thick AISI 304 stainless steel plinth.

Plinth						
Dimensions (mm)						
H	W	D	Code	Item	Price	Package/ No. of pieces
100	400	200	ZA4020X			1/1
100	500	200	ZA5020X			1/1
100		250	ZA5025X			1/1
100	600	200	ZA6020X			1/1
100		300	ZA6030X			1/1
100	800	300	ZA8030X			1/1

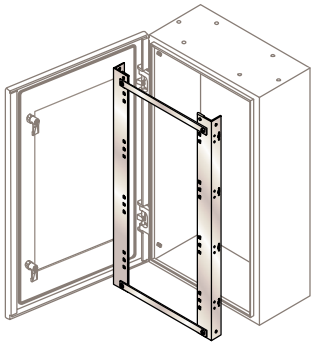

Frame for DIN rail

Internal supports for fixing modular panels and DIN rails, with compensation panels, made of AISI 304 stainless steel.

Description	Dimensions (mm)		Code	Item	Price	Package/ No. of pieces
	H	W				
Supports for 14 DIN mod. x 2 rows	500	400	KD5040X			1/1
Supports for 14 DIN mod. x 3 rows	600	400	KD6040X			1/1
Supports for 25 DIN mod. x 4 rows	800	600	KD8060X			1/1
Supports for 36 DIN mod. x 5 rows	1000	800	KD1080X			1/1

> Rapid selection table page 2/4 > In-depth technical information page 6/1 > Overall dimensions page 7/1

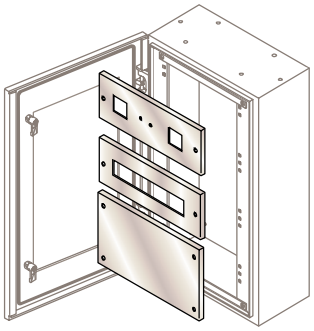

Screwed modular panels

12/10 mm thick AISI 304 stainless steel modular panels. The screwed modular panels can be fitted on the enclosures using the special kit (KD...) consisting of functional uprights and a compensation panel.

Each modular panel (PM) comes equipped with a DIN rail (depth-adjustable), fixing brackets and the relative small parts. Tmax modular and moulded-case circuit breakers up to T3 can be positioned side by side on the same DIN rail using the special depth adapter AP6001. To install MCCBs, fix the DIN rail in the recessed position. The DIN rail fixing brackets allow mounting of the wiring duct up to a maximum size of 60 x 60 mm.

Stainless steel screwed modular panels for DIN rail (including DIN rail and fixing brackets)

Description	Dimensions (mm) H	W	Code	Item	Price	Package/ No. of pieces
14 DIN mod. + fixing bracket	185	400	PM1414X			1/1
25 DIN mod. + fixing bracket	185	600	PM1625X			1/1
36 DIN mod. + fixing bracket	185	800	PM1836X			1/1

Stainless steel screwed modular panels for measuring instruments

Description	Dimensions (mm) H	W	Code	Item	Price	Package/ No. of pieces
2 instruments 72 x 72mm	185	400	PS2476X			1/1
2 instruments 72 x 72mm	185	600	PS2676X			1/1
2 instruments 72 x 72mm	185	800	PS2876X			1/1

Stainless steel blind screwed modular panels

Description	Dimensions (mm) H	W	Code	Item	Price	Package/ No. of pieces
Blind panel	185	400	PC1406X			1/1
Blind panel	185	600	PC1606X			1/1
Blind panel	185	800	PC1806X			1/1
Blind panel	370	600	PC2606X			1/1
Blind panel	370	800	PC2806X			1/1

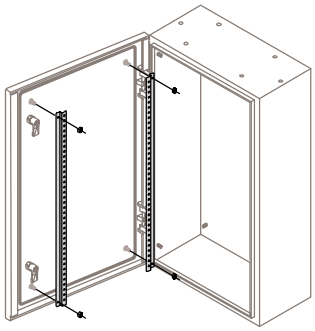

Shaped sections for accessories

Allow fixing of accessories (e.g.: wiring ducts) inside the blind doors. Consist of a pair of vertical crosspieces made of 15/10 thick white galvanised sheet metal, pre-drilled with 25 mm pitch. In enclosures with height 1000 and 1200 mm with an blind door, the shaped sections are already supplied.

Description	Dimensions (mm) H	Code	Item	Price	Package/ No. of pieces
Shaped sections for door	600	TS6009			1/2
Shaped sections for door	700	TS7009			1/2
Shaped sections for door	800	TS8009			1/2

> Rapid selection table page 2/4 > In-depth technical information page 6/1 > Overall dimensions page 7/1

SRX enclosures
Ordering codes

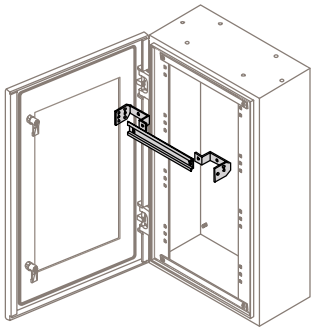

DIN rail and fixing brackets

Descrizione	No. modules	W (mm)	Code	Item	Price	Package/ No. of pieces
DIN rail and fixing brackets	14	400	GD4006			1/1
DIN rail and fixing brackets	25	600	GD6006			1/1
DIN rail and fixing brackets	36	800	GD8006			1/1

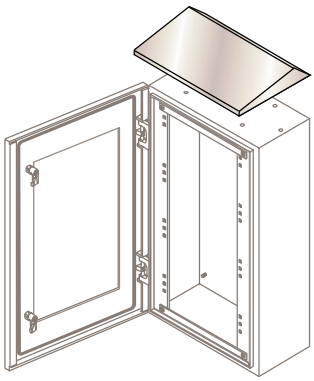

Spray protection roof

Improves protection against infiltration by liquids and accidental sprays.
Made of 15/10 thick AISI 304 stainless steel.

Spray protection roof					
Dimensions (mm)					
W	D	Code	Item	Price	Package/ No. of pieces
200	150	TT2015X			1/1
300	150	TT3015X			1/1
400	150	TT4015X			1/1
300	200	TT3020X			1/1
400	200	TT4020X			1/1
500	200	TT5020X			1/1
600	200	TT6020X			1/1
500	250	TT5025X			1/1
600	250	TT6025X			1/1
600	300	TT6030X			1/1
800	300	TT8030X			1/1

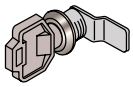

AA8001X

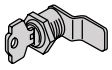

AA8002

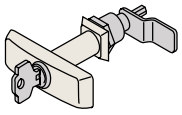

AA8003



EV1008

Closing systems

May substitute standard fasteners for the external doors.

Description	Code	Item	Price	Package/ No. of pieces
Box Ø19mm double tongue made of chrome-finished plastic and key for external door	AA8001X			1/1
Box Ø19mm with safety insert and Yale type key for external door	AA8002 (1)			1/1
Box Ø19mm with handle and Yale type key for external door	AA8003 (1)			1/1
Box Ø19mm with triangular insert for external door (Nema TYPE 12)	AA5200 (1)			1/1
Plastic key for triangular insert AA5200 for external door	AA5190			1/1
Box with double tongue insert made of plastic with key for inner door (Nema TYPE 12)	EV1008			1/1
Single code Yale insert for inner door	EV1036			1/1
Ronis 455 insert for inner door	EV1037			1/1
3mm double tongue insert for inner door	EV1039			1/1

(1) Only for external door

> Rapid selection table page 2/4 > In-depth technical information page 6/1 > Overall dimensions page 7/1

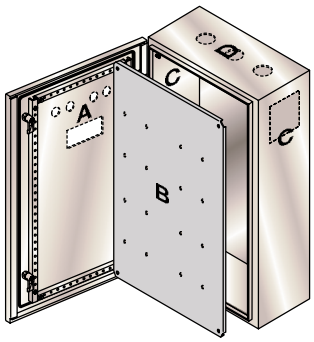

Special drilling service

The extra cost depends on the number of individual parts drilled rather than the number of holes made.
By individual part we mean: A-door; B-plate; C-box and D-upper/power part.
The special drilling service must be managed using the code SRX.../SPEC plus code FORSRX.
Include the layout drawing of the holes to be drilled (see page 7/28 for possible drilling areas).

Description	Code	Item	Price	Package/ No. of pieces
Extra cost for drilling service per individual part SRX	FORSRX			

Special painting service

The customized painting sevice is available presenting a request of feasibility to our special product department (offer). Please contact your local sales unit.

Description	Code	Item	Price	Package/ No. of pieces
Extra cost for special painting SRX	VERNSRX			

Spare parts

Description	Code	Item	Price	Package/ No. of pieces
Stainless steel screws (No. 16 screws, flanged nuts and nylon washers)	AA1203X			1/1
Blind door 300x200mm (HxW)	PRN3026X			1/1
Blind door 300x400mm (HxW)	PRN3046X			1/1
Blind door 400x300mm (HxW)	PRN4036X			1/1
Blind door 400x400mm (HxW)	PRN4046X			1/1
Blind door 400x600mm (HxW)	PRN4066X			1/1
Blind door 500x400mm (HxW)	PRN5046X			1/1
Blind door 500x500mm (HxW)	PRN5056X			1/1
Blind door 600x400mm (HxW)	PRN6046X			1/1
Blind door 600x600mm (HxW)	PRN6066X			1/1
Blind door 600x800mm (HxW)	PRN6086X			1/1
Blind door 700x500mm (HxW)	PRN7056X			1/1
Blind door 800x600mm (HxW)	PRN8066X			1/1
Blind door 800x800mm (HxW)	PRN8086X			1/1
Blind door 1000x800mm (HxW)	PRN1086X			1/1
Blind door 1200x600mm (HxW)	PRN1266X			1/1
Blind door 1200x800mm (HxW)	PRN1286X			1/1
Glass door 400x300mm (HxW)	PTN4036X			1/1
Glass door 500x400mm (HxW)	PTN5046X			1/1
Glass door 600x400mm (HxW)	PTN6046X			1/1
Glass door 700x500mm (HxW)	PTN7056X			1/1
Glass door 800x600mm (HxW)	PTN8066X			1/1
Glass door 1000x800mm (HxW)	PTN1086X			1/1

> Rapid selection table page 2/4 > In-depth technical information page 6/1 > Overall dimensions page 7/1