kW-Transmitter APM10

Technical information Version 1.0

Generelt

*** Transmitter for kW, 3 phase symmetrical load**

*** APM10 may be connected to a 3 phase net of up to 3x500Vac**

*** Measures Power from the formula P = √3 x U x I x cosΦ**

*** Internal Current Transformer**

*** Input Current Range 5, 10, 20, 25, 40, 60 Aac**

*** 24V Power Supply**

*** Analogue output 0(4)-20mA or 0(2)-10V**

*** Galvanic insulation between input and output**

*** Test Voltage 3kV**



Features

APM10 is a member of the Unipower family APMxxx, but can also be used for datalogging, primarily in connection with modules from the HCxxx transmitter family. See page 2 for an overview of the transmitter family.

Input

The module is connected to a 24V Power Supply. The phases L1, L2 and L3 are connected using the terminals 1, 3 and 5. See typical installation on page 2. The phase order is of no importance, but it is important to measure the current in the same phase as connected to the modules Terminal 1. Also, pay attention to the direction of the current.

Analogue output

The module has an analogue output. Using the DIP-switch 0-20mA or 4-20mA may be selected. The 0-10V output is selected by setting the DIP-switch to 0-20mA and establising a connection between GND (Terminal 7) and X1(Terminal 8)

MODbus

Datalogging may be performed by connecting the module's analogue output to one of the inputs of the HC300 Dat module.

DIP-switch settings

Access to a 4 pole DIP-switch is found on the side of the module. The function of the switches is shown in the table below. SW1 is used to select 0-20mA or 4-20mA output. SW2-SW4 is used to set input current range. If a larger range is needed, for instance 2.5A, this may be achieved by selecting 5A with the DIP-switch and leading the cable twice through the internal CT. The final row in the table shows the kW range of the corresponding setting for the current range. The unit is calibrated at 3x400Vac, but may be delivered calibrated at other voltages.

Sw 1	Off = 4 - 20mA			On = 0 - 20mA		
Sw 2	Off	On	Off	On	Off	On
Sw 3	Off	Off	On	On	Off	On
Sw 4	Off	Off	Off	Off	On	On
Amp.	5	10	20	25	40	60
kW	3,46	6.92	13.8	17,3	27,7	41,6

Technical Specifications

Mechanical

Housing:	Lexan UL94V-0 (Upper)
	Noryl UL94V-0 (Lower)
Mounting:	M36 for 35 mm DIN rail
IP Class:	Housing IP40. Connector IP20
Connector:	Max 16A. Max 2,5 mm^2
	Max torque 0,6 Nm
Temp.:	-15 to +50 ^{O}C
Weight:	200 g
Dimens.:	D 58 x W 36 x H 86 mm
CE mark:	EN61326A, LVD EN61010

Electrical

Power Supply:	24Vdc ±5%
Consumption:	60 mA max
Input Voltage Range:	3x200 to 3x500 Vac
Input Current Range:	5, 10, 20, 25, 40, 60 Aac
Input frequency Range:	10-150Hz
Accuracy:	Class 2
Analogue output:	0(4)-20mA or 0(2)-10V
Load impedance:	Max 500Ω at current
	Min 100 kΩ at voltage

Typical Installation

Notes

The APM10 is connected to the 3 phases and load as illustrated in the figure to the right. For futher information see the section *Input* on p. 1.

V/f measurement. APM10 may be used for measuring after a frequency inverter. For this terminal 1, 3 and 5 is connected to U, V and W, and the current is measured in phase U. **Note**: At inverted frequencies close to the net frequency an intermodulation phenomenon may occur caused by the sawtooth voltage on the charging capacitor of the inverter. The phenomenon is seen as a low frequency fluctuation of the output signal. This is most evident when using a single phase supplied frequency inverter due to the sawtooth voltage frequency of 100 Hz. In a 3 phase supplied inverter the sawtooth voltage frequency is 300 Hz and the intermodulation phenomenon is neglible.

If this is a problem we recommend using our APM380 and APM382 units, both of which are based on 3 phased measurement thereby eliminating the above mentioned phenomenon.

Single phase measurement. The module may be used for uncalibrated single phase measurements. This is achived by connecting L2 (terminal 3) and L3 (terminal 5) to 'N'. For 100% output the current must be increased by a factor of 1.5. On request the APM10 can be provided in a version modified and calibrated to an single phase net.

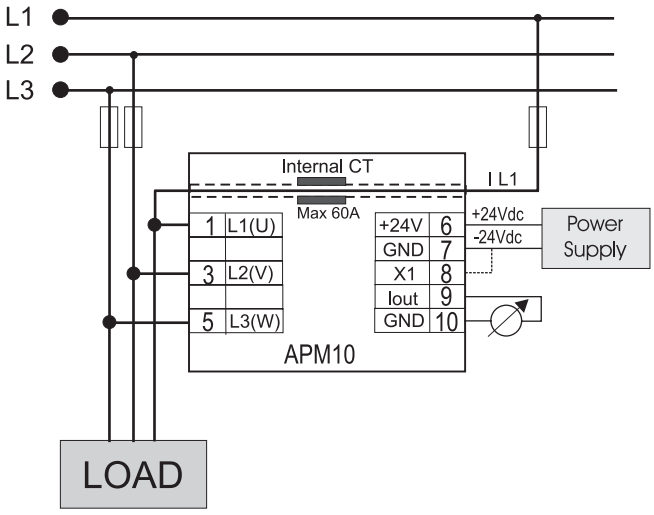

The HC300 transmitter Family

Datalogger HC300



HC300 is a datalogger and MODBus master. The unit has 4 analogue inputs which may be logged. Futhermore up to 14 nodes may be connected using RS485, resulting in up to 60 measuring points. Sampletimes from 1 to 600 sec. Memory is 4 Mbyte FLASH

O_2 transmitter HC302



HC302 is an oxygentransmitter. It is produced in 2 versions depending on the oxygen sensor. The unit has 1 analogue output and it may be connected to a MODBus network for datalogging. Temperature-compensation is done using a Pt100 or an NTC sensor. The unit also displays temperature.

mA transmitter HC304



HC304 is a multipurpose transmitter with up to 4 analogue inputs. The unit has an analogue output and it may be connected to a MODBus network for datalogging. The measured inputs may be displayed as engineering values using the build-in scaling functionality.

pH transmitter HC301



HC301 is a pH transmitter with 1 analogue output and it may be connected to a MODBus network for datalogging. Automated temperature compensation is possible using a Pt100/Pt1000 sensor or a fixed user selectable temperature. The unit displays pH and temperature (^{O}C).

Conductivity transmitter HC303



HC303 is a conductivity transmitter. The unit has 1 analogue output and it may be connected to a MODBus network for datalogging. Up to 3 measuring ranges may be selected. Auto. temperature compensation is possible using a Pt100/Pt1000 sensor. The unit displays conductivity and temperature.

Controller HC320



HC320 has two independent limits each free programmable as either max- or min- limit. The necessary timers (start- and response) and features needed for an efficient controller is also included. Input signal is any 0(4)-20mA and two relays signal alarm condition. The input signal may be scaled down to 50%.

Example of MODBus network with HC300 as Master

Notes:

The example on the right showa a network consisting of 1 master and 3 nodes. The HC300 is connected to 4 sensors and the MODbus. To maintain galvanic insulation between input and output two 24V power supplies must be applied. The HC301 measures pH and temperature and The HC302 measures oxygen. The HC304 is connected to 4 data signals. In this example data is collected from a total of 11 data signals.

If the distance between the modules is too big the RS485 network is terminated with a resistance RT of typically 120Ω. The included cabel is used when transfering data from the the HC300 to a PC.

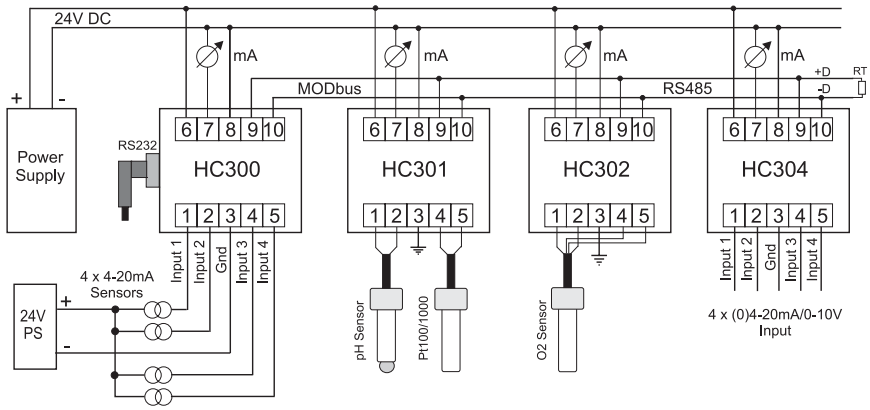

Data Sheet for Unipower APM10/400V. September 2009.
Subject to change.