Top View of Assembly

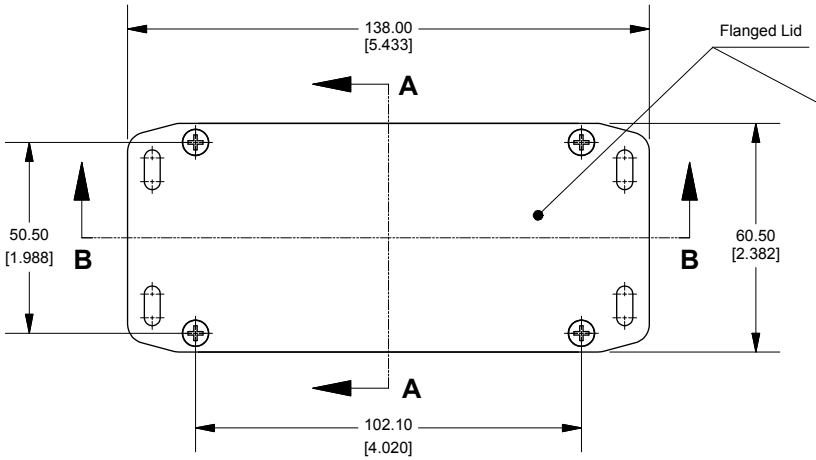

SECTION A-A
End View of Assembly

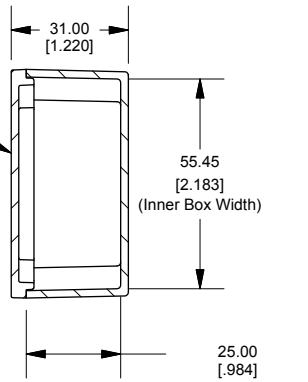



SECTION B-B
Side View of Assembly

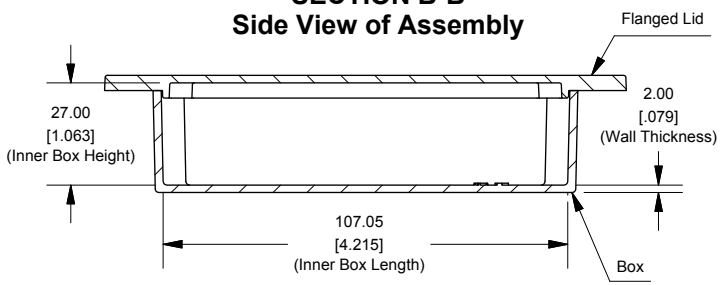

Top View Looking Inside Box

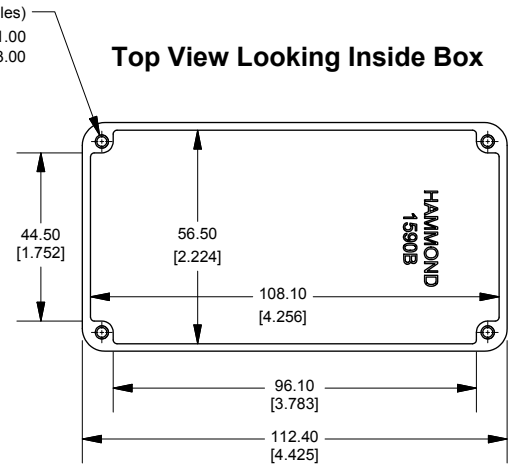

Enclosures can be Factory Modified (Milling, Drilling, Printing etc.)
Contact Factory mjm@hammondmfg.com for quotes
Solid models of this enclosure available in STEP or IGES.

NOTE
Purchased assembly includes box, lid and 4 cover screws. Box and lid are made from Diecast Aluminum Alloy. Silicone Gasket supplied with liquid resistant enclosure.

PART NUMBERS	
1590BFL Enclosure	
Natural Finish Enclosure	1590BFL
Black Textured Enclosure	1590BFLBK
1590BFL Liquid Resistant Enclosure (Silicone Gasket)	
Natural Finish Enclosure	1590WBFL
Black Textured Enclosure	1590WBFLBK
ACCESSORIES	
Recommended Torque: 75 ozf.in / 55 cN.m	
Liquid Resistant Cover Screws	
Stainless Steel Cover Screws (Pkg 100) [6-32 x 1/2" With O-Ring]	1590WMS100
Black Stainless Steel Cover Screws (Pkg 100) [6-32 x 1/2" With O-Ring]	1590WMS100BK
Standard Cover Screws	
Plated Cover Screws (Pkg 100) [6-32 x 1/2"]	1590MS100
Black Cover Screws (Pkg 100) [6-32 x 1/2"]	1590MS100BK

Flanged Lid

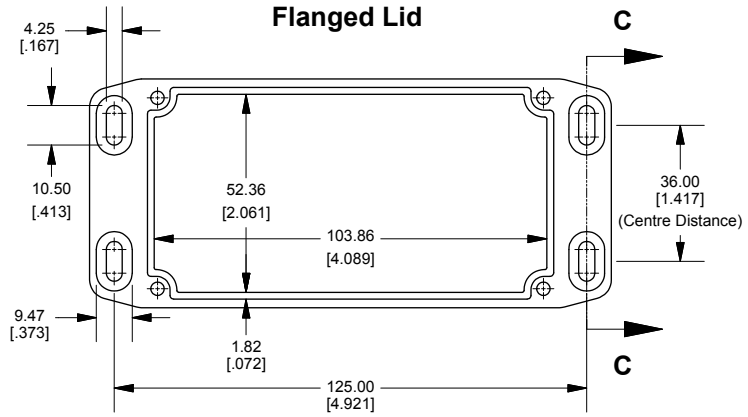

SECTION C-C
Side of Slot

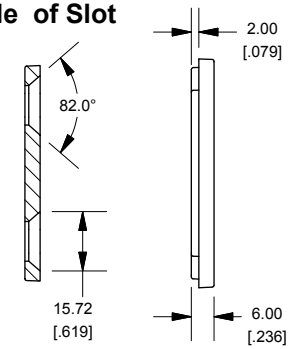

Dimensions:
mm
[inches]

HAMMOND MANUFACTURING™

1590BFL

www.hammondmfg.com