DATASHEET - C22-PVT45P-K02



Emergency-stop, Palm-tree shape, 45 mm, Turn-to-release function, 2 NC, Screw connection

Part no.	**C22-PVT45P-K02**
Catalog No.	**121611**
Alternate Catalog No.	**C22-PVT45P-K02**
EL-Nummer (Norway)	**4315101**

Delivery program

Product range			RMQ Compact
Basic function			Controlled stop pushbuttons/emergency-stop buttons
Single unit/Complete unit			Complete unit
Design			Palm-tree shape
Diameter	∅	mm	45
Illumination			Non-illuminated
			Turn-to-release function
Connection type			Screw connection
Description			Tamper-proof according to ISO 13850/EN 418
Colour			
Mushroom head			Red
			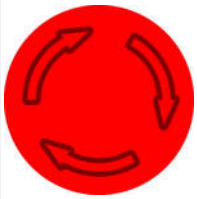
Base			yellow
			Red mushroom head (RAL 3000)
Degree of Protection			IP66, IP67, IP69
Connection to SmartWire-DT			no
Contacts			
N/C = Normally closed			2 NC
Notes			= safety function, by positive opening to IEC/EN 60947-5-1
Actuator travel and actuation force as per DIN EN 60947-5-1, K.5.4.1			
	mm		4.65
Maximum travel	mm		5.7
Minimum force for positive opening	N		30
Contact sequence			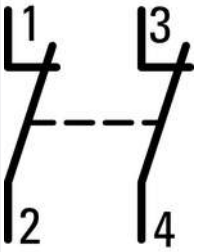
Contact travel ■ = Contact closed □ = Contact open			
Contact diagram			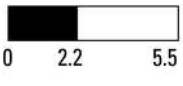
Positive opening (ZW)			yes
Function			Turn-to-release function

Technical data

General

Standards			IEC/EN 60947-5-5 VDE 0660
Lifespan, mechanical	Operations	x 10^6	> 0.05
Operating frequency	Operations/h		≦ 300
Actuating force		n	≦ 50
Climatic proofing			Damp heat, constant, to IEC 60068-2-78 Damp heat, cyclic, to IEC 60068-2-30
Degree of Protection			IP66, IP67, IP69
Mounting position			As required
Terminal capacities		mm^2	
Solid		mm^2	2 x 0.5 - 1.5
Flexible with ferrule		mm^2	2 x 0.5 - 1.5
Tightening torque for terminal screw		Nm	0.8

Contacts

Rated impulse withstand voltage	U_{imp}	V AC	4000
Rated insulation voltage	U_i	V	250
Rated conditional short-circuit current	I_q	kA	1
Overvoltage category/pollution degree			III/3
Control circuit reliability			
at 24 V DC/5 mA	H_F	Fault probability	values follow
at 5 V DC/1 mA	H_F	Fault probability	values follow
Max. short-circuit protective device			
Fuse	gG/gL	A	10

Technical data ETIM 7.0

Low-voltage industrial components (EG000017) / Emergency stop complete (EC002034)

Electric engineering, automation, process control engineering / Low-voltage switch technology / Command and alarm device / EMERGENCY-STOP pushbutton, complete device (ecl@ss10.0.1-27-37-12-44 [ACN986011])

Unlocking method			Turn-release
Number of contacts as normally closed contact			2
Number of contacts as normally open contact			0
Degree of protection (IP)			IP67/IP69K
Mounting method			Built-in
With lighting			No
Hole diameter		mm	22.5
Connection type auxiliary circuit			Other
Diameter cap		mm	45

Approvals

Product Standards			IEC/EN 60947-5-1; UL 508; CAN/CSA-C22.2 No. 14-05 und 94-M91; CE marking
UL File No.			E29184
UL Category Control No.			NKCR
CSA File No.			165628
CSA Class No.			321103
North America Certification			UL listed, CSA certified
Degree of Protection			1,3R,4X,12,13

Dimensions

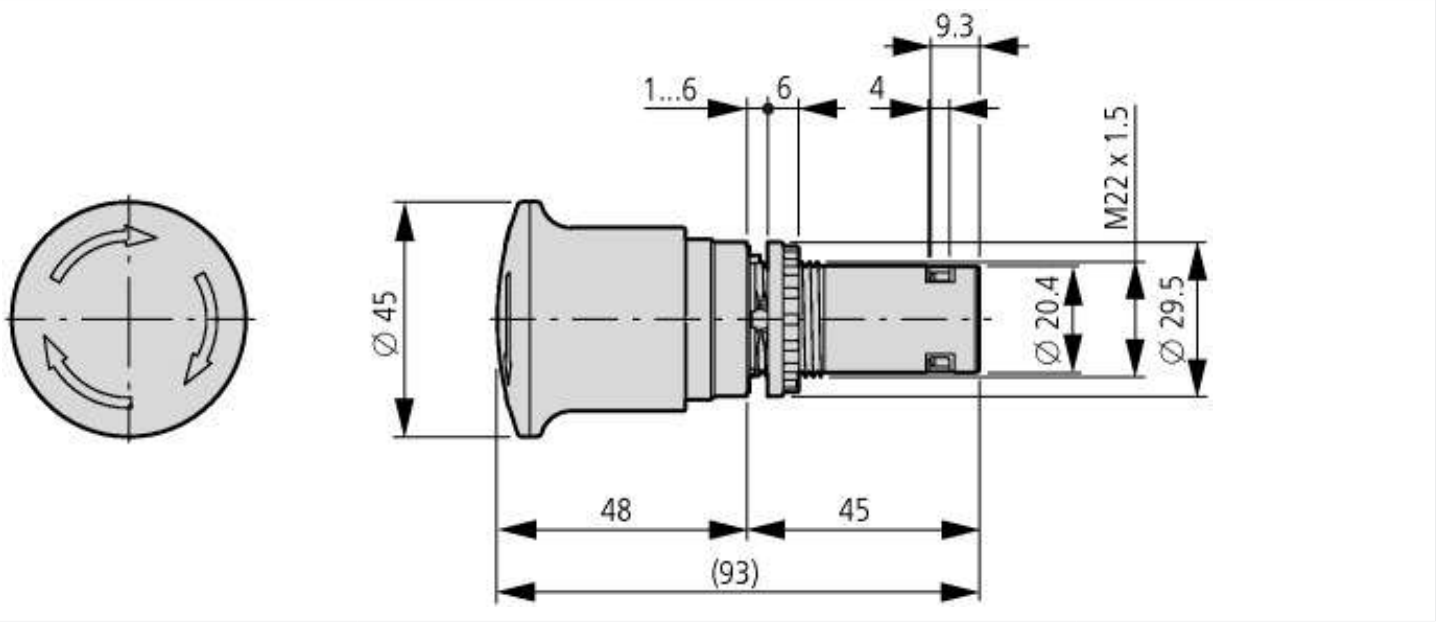

© 09/2021 by Eaton Industries GmbH