Product Data Sheet
July 2014
00813-0100-4841, Rev DA

Rosemount 3490 Series

4–20 mA + HART® Compatible Controller



- Field mounted controller with integral multi-function LCD and keypad
- Tough weatherproof wall mount enclosure for internal or external mounting
- Accepts 4–20 mA and HART inputs
- Compatible with HART 7 transmitters
- Intrinsically Safe power supply to a transmitter
- Isolated 4–20mA output
- Five field adjustable alarm / control relays
- Pre-programmed with tank shapes, flow algorithms, and pump control routines to simplify configuration

ROSEMOUNT®

EMERSON™
Process Management

Overview of the Rosemount 3490 Series



Wall mount, IP65 version of the Rosemount 3490 Series controller unit



Wall Mount, NEMA 4X version of the Rosemount 3490 Series controller unit



Panel Mount version of the Rosemount 3490 Series controller unit

The Rosemount 3490 Series of wall and panel mounting control units provide comprehensive control functionality for any 4–20 mA or HART compatible transmitter. A back-lit display gives clear visual indication of the measured value and status of all inputs and outputs.

Features and benefits

- Tough weatherproof wall mount enclosure for internal and external mounting
- Accepts 4–20 mA or HART inputs.
  Compatible with HART 5, 6, and 7 Transmitters
- Five voltage-free SPDT relays for alarm and control duties
- Supports two voltage-free contact closure inputs
- 4–20 mA 12-bit isolated current output proportional to calculated value
- Bright local display of measured value and input/output status
- Pre-programmed tank shapes, flow algorithms, and control routines simplify configuration. A 20-point strapping table facility is provided for non-standard applications
- Real-time clock for energy saving routines, pump efficiency calculations, and date/time stamping of data logging
- The 3490 Series is mounted in a non-hazardous area, and provides a protected (intrinsically safe) 24 volts direct current supply to a transmitter in a hazardous area.

Ideal for programming and control of Rosemount level and flow transmitters

It is ideal for programming and control of Rosemount 3100 Series level and flow transmitters, and Rosemount 3300 Guided Wave Radar level and interface transmitters (non-explosion-proof only).

Other HART transmitters can be connected. The 3490 Series recognizes the transmitters as an “unknown instruments” but allows access to programming of Universal and Common Practice HART commands.

Contents

Overview of the Rosemount 3490 Series ..... page 2
Rosemount 3490 Series Control Unit Ordering .. page 4
Specification ..... page 5
Product Certifications ..... page 7
Dimensional Drawings ..... page 8

Special features

- Configured and interrogated using an integral six-button keypad
- Easy to navigate menu structure
- Wizard assisted programming, with password protection to prevent unauthorized access

  Many popular configurations are “Wizard assisted”, enabling fast and accurate programming. Typical applications include level, volume, distance measurement, and open channel flow measurement
- The HART digital or 4–20 mA analog signal from the transmitter may be offset, dampened, scaled, and linearized. A range of pre-programmed linearization algorithms are user-selectable
- The 4–20 mA output signal may be scaled to re-transmit all or just part of the transmitter’s input signal or calculated value
- Five relays are fully field programmable to perform a variety of control, fault indication, and alarm duties
- Two digital inputs can be individually set-up to perform various control actions (e.g. raise an alarm) whenever activated

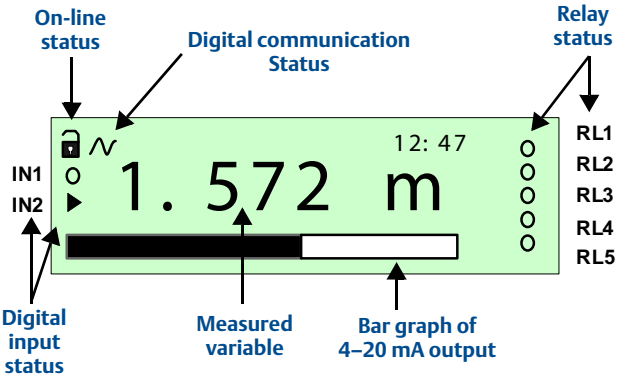

Typical display of the Rosemount 3491

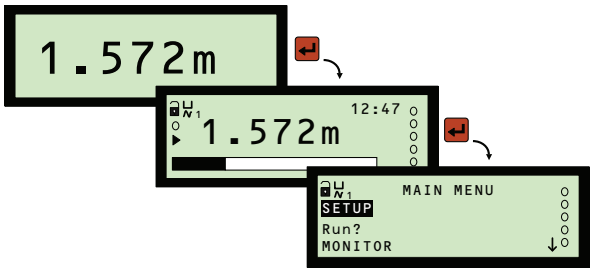

Easy to navigate menu structure

Choosing the right control unit

Each control unit of the 3490 Series has been designed for a specific purpose:

Table 1. Choosing the right control unit

Control Units	Models	Ordering information
Standard Control Unit	3491	See page 4
Differential Measurement Control Unit	3492	See page 4
Logging Measurement Control Unit	3493	See page 4

- The Standard Control Unit accepts input from one transmitter
- The Rosemount 3492 Differential Measurement Control Unit accepts input from two HART transmitters and performs sum or differential calculations, providing a single current output proportional to the answer
- The Rosemount 3493 Logging Measurement Control Unit provides on-board logging of the process/primary value (PV), and totalized open channel flow

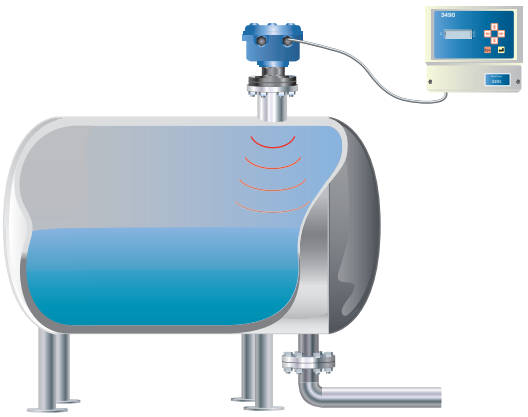

Level or volume measurement with a Rosemount 3490 Series Control Unit and Rosemount 3100 Series Level Transmitter

Rosemount 3490 Series Control Unit Ordering

Rosemount 3490 Series control unit ordering information

Specification and selection of product materials, options, or components must be made by the purchaser of the equipment. See page 6 for more information on Material Selection.

Table 2. Rosemount 3491, 3492, and 3492 ordering information

★The Standard offering represents the most common models and options. These options should be selected for best delivery.
The Expanded offering is manufactured after receipt of order and is subject to additional delivery lead time.

Model	Product Description	
3491	Standard Control Unit	
3492	Differential Control Unit	
3493	Logging Control Unit	
Signal Output		
Standard		**Standard**
L	4–20 mA	★
Power Supply		
Standard		**Standard**
1	115/230 Vac	★
2	24 Vdc	★
Enclosure / Mounting		
Standard		**Standard**
P6	Wall mounting, IP65	★
P7	Panel mounting, IP40	★
P4	Wall mounting, NEMA 4X	★
Product Certificates		
Standard		**Standard**
I1	ATEX Intrinsically Safe	★
I3	NEPSI Intrinsically Safe	★
I5[(1)(2)]	FM Intrinsically Safe	★
I6[(3)]	CSA Intrinsically Safe	★
I7	IECEx Intrinsically Safe	★
IM[(4)]	Technical Regulation Customs Union (EAC) Intrinsically Safe	★
Typical Model Number: 3491 L 1 P4 I5		

(1) Enclosure/Mounting code P4 is required for this option.
(2) Power supply code 1 is required for this option.
(3) Enclosure/Mounting codes P4 or P7 are required for this option.
(4) Contact an Emerson Process Management representative for additional information.

Accessory ordering information

Specification and selection of product materials, options, or components must be made by the purchaser of the equipment. See page 6 for more information on Material Selection.

Table 3. Accessory ordering information

★The Standard offering represents the most common models and options. These options should be selected for best delivery.
The Expanded offering is manufactured after receipt of order and is subject to additional delivery lead time.

Accessory		
Standard		**Standard**
03490-7001-0001	IP65 hood kit for panel-mountable control unit (P7 option in Table 2)	★

Specification

General

Product

- Rosemount 3490 Series Universal Control Unit:
  3491 Standard Control Unit
  3492 Differential Control Unit
  3493 Logging Control Unit

Mounting styles

- Wall or panel mount

Power options

- AC mains or DC

Display

Type

- Dot matrix LCD, 32 x 122 pixels, back lit

Location

- Integrated into enclosure

Indicators

- Red LED for health status

Electrical

AC mains power supply input

- 115 or 230 Vac ±10% (switch selectable)
- Power consumption: 10 VA nominal, 18 VA maximum
- Fuse: 200 mA(T), 5 x 20 mm, 250 V

DC power supply input

- 15 to 30 Vdc, 30 Vdc maximum
- Power consumption: 9 W maximum

Current input

- 4–20mA (Earth referenced in control unit) or HART digital communications (Rev. 5, 6, and 7)
- One HART transmitter on the Rosemount 3491 and 3493, and two HART transmitters on the Rosemount 3492
- Supplies 23 volts from 400 Ohm source resistance

Trigger inputs

- 2 voltage-free contact closures

Relays

- 5 x SPDT, 5 A at 240 Vac

Current output

- Signal range (nominal): 4–20 mA
- Output range (linear):

  3.8 to 20.5 mA
  (user-selectable alarm current of 3.6 mA, 21 mA, or 22.5 mA)
  or
  3.9 to 20.8 mA
  (user-selectable alarm current of 3.75 mA, or 21.75mA)
- Load: Rmax is 1 K Ohm
- Resolution: 12-bit
- Regulation: < 0.1% over load change from 0 to 600 Ohms
- Isolation: Isolated from other terminals to 500 Vdc
- Update rate (software): 5 times per second

Cable entry

- IP-rated wall mount enclosure:

  5 positions pre-drilled, 2 glands and 3 blanking plugs supplied
- NEMA-4X-rated wall mount enclosure:

  Positions require drilling by user, glands/conduits and blanking plugs are not supplied
- Panel enclosure:

  Direct wiring to terminal blocks at rear

Cable connection

- Wall mount enclosure:

  Cage clamp terminal blocks in separate terminal compartment
- Panel mount enclosure:

  2-part cage clamp terminal blocks at rear

Mechanical

Material selection

- Emerson provides a variety of Rosemount product with various product options and configurations including materials of construction that can be expected to perform well in a wide range of applications. The Rosemount product information presented is intended as a guide for the purchaser to make an appropriate selection for the application. It is the purchaser's sole responsibility to make a careful analysis of all process parameters (such as all chemical components, temperature, pressure, flow rate, abrasives, contaminants, etc.), when specifying product, materials, options and components for the particular application. Emerson Process Management is not in a position to evaluate or guarantee the compatibility of the process fluid or other process parameters with the product, options, configuration or materials of construction selected.

Materials of construction (wall mount)

- Polycarbonate enclosure and cover
- IP-rated wall mount: 304SST cover fixing screws
- NEMA-4X-rated wall mount: Polyester and Alloy 400 fastening
- UV resistant Polycarbonate membrane keypad
- Nylon cable glands and blanking plugs (IP-rated wall mount version only)

Materials of construction (panel mount)

- Noryl PPO enclosure and cover
- Carbon Steel / Zinc plated fascia fixing screws
- UV resistant Noryl PPO membrane keypad
- Nylon + PBT terminal blocks with plated fittings

Dimensions

- See Dimensional Drawings on pages 8 to 10

Weight

- IP-rated wall mount: 1.4 kg (mains unit) or 1.0 kg (DC unit)
- NEMA-4X-rated wall mount: 3.5 kg (mains unit) or 3.1 kg (DC unit)
- Panel mount: 1.2 kg (mains unit) or 0.8 kg (DC unit)

Environment

Ambient temperature

- –40 to 55 °C (–40 to 131 °F)

  See "Product Certifications" on page 7 for approval temperatures ranges

Relative humidity

- Wall mount: 100%
- Panel mount: 90% non-condensing

Electrical safety

- EN61010-1

Ingress protection

- IP-rated wall mount: IP65 indoor/outdoor
- NEMA-4X-rated wall mount: NEMA 4X indoor/outdoor
- Panel mount: IP40 indoor mount (or IP65 if with optional hood)

Vibration

- Control Room: 0.1 to 9 Hz 1.5 mm displacement peak amplitude / 9 to 200 Hz 0.5 g

Installation category

- Category III: Supply voltage < 127Vac (IEC60664)
- Category II: Supply voltage < 254Vac (IEC60664)

Pollution degree

- 2 (IEC60664)

Maximum altitude

- 2000 m

Electromagnetic compatibility

- Emissions and immunity (for IP-rated wall mount and panel mount): EN61326-1:2006

Certifications

- Intrinsically Safe associated apparatus
- See "Product Certifications" on page 7

Product Certifications

European directive information

The EC declaration of conformity for all applicable European directives for this product can be found in the Rosemount 3490 Series Product Certifications document 00825-0200-4841 and on the Rosemount website at www.rosemount.com.

ATEX directive (94/9/EC)

- Emerson Process Management complies with the ATEX directive

Low voltage directive (2006/95/EC)

- The Rosemount 3490 Series control unit complies with EN61010 Part 1

Pressure equipment directive (PED) (97/23/EC)

- The Rosemount 3490 Series control unit is outside the scope of PED

Electro magnetic compatibility (EMC) directive (2004/108/EC)

- The Rosemount 3490 Series control unit complies with EN61326-1: 2006

Restriction of hazardous substances (RoHS)

- The Rosemount 3490 Series control unit is exempt

Hazardous locations certifications

The 3490 Series is mounted in a non-hazardous area, and provides a protected (intrinsically safe) 24 volts direct current supply to a transmitter in a hazardous area

North American and Canadian approvals

Factory Mutual (FM) intrinsically safe approvals

I5 Contact an Emerson Process Management representative for additional information

Canadian Standards Association (CSA) intrinsically safe approvals

I6 Project ID: 1830310
Intrinsically safe for:
Class I, Division 1, Groups A, B, C, and D
Intrinsically safe for:
Class 1, Zone 0, Group IIC [Ex ia]
Ambient temperature: –40 °C to +55 °C
Control drawing: 71097/1201
Uo = 27.3 V, Io = 96.9 mA, Po = 0.66 W,
La = 2.26 mH, Ca = 70 nF

European approvals

ATEX intrinsically safe approvals

I1 Certificate numbers:
SIRA 06ATEX7128 (Wall Mount),
SIRA 06ATEX7129X (Panel Mount)
Intrinsically safe for II(1) G D,
[Ex ia] IIC, [Ex ia Da] IIIC
Ambient temperature: –40 °C to +55 °C
Uo = +27.3 V, Io = 96.9 mA, Po = 0.66 W,
La = 2.26 mH, Ca = 70 nF

Special conditions for safe use (SIRA 06ATEX7129X):

- Terminal 30 must be connected to a high integrity earth/ground point in a non-hazardous area

Rest of the world approvals

National Supervision and Inspection Centre for Explosion Protection and Safety Instrumentation (NEPSI) intrinsically safe approval

I3 Certificate number: GYJ11.1710X
Intrinsic safety: [Ex ia Ga] IIC

IECEx intrinsically safe approvals

I7 Certificate number: IECEx SIR 06.0104X
Intrinsically safe for:
[Ex ia] IIC, [Ex ia Da] IIIC
Ambient temperature: –40 °C to +55 °C
Uo = 27.3 V, Io = 96.9 mA, Po = 0.66 W,
La = 2.26 mH, Ca = 70 nF

Conditions of certification (panel mount):

- Terminal 30 must be connected to a high integrity earth/ground point in a non-hazardous area

Technical Regulation Customs Union (EAC)

IM Contact an Emerson Process Management representative for additional information

Dimensional Drawings

IP-rated wall mount unit

Note: Dimensions are in inches (mm).

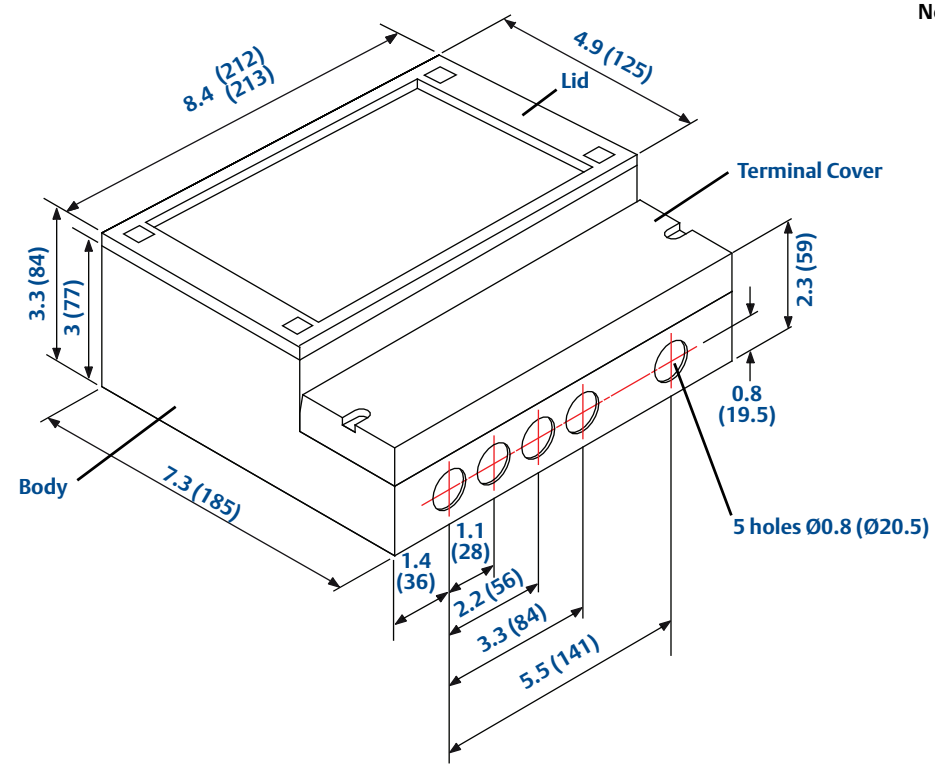

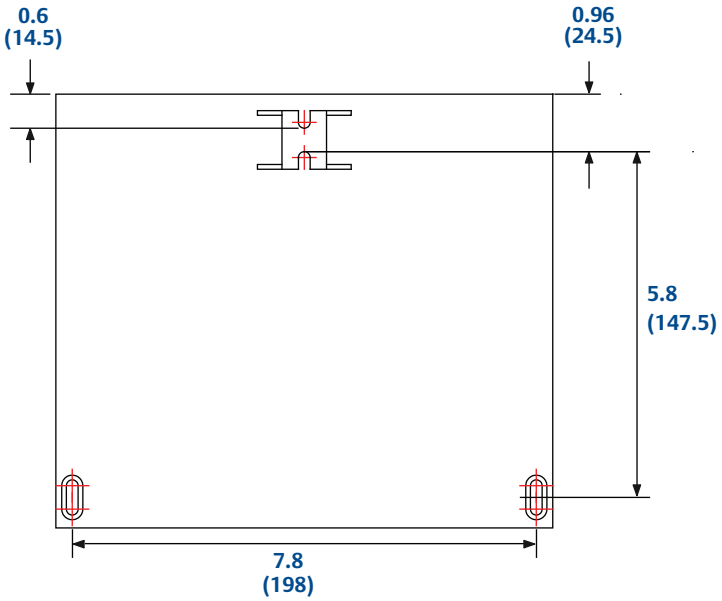



NEMA-4X-rated wall mount unit

Note: Dimensions are in inches (mm).

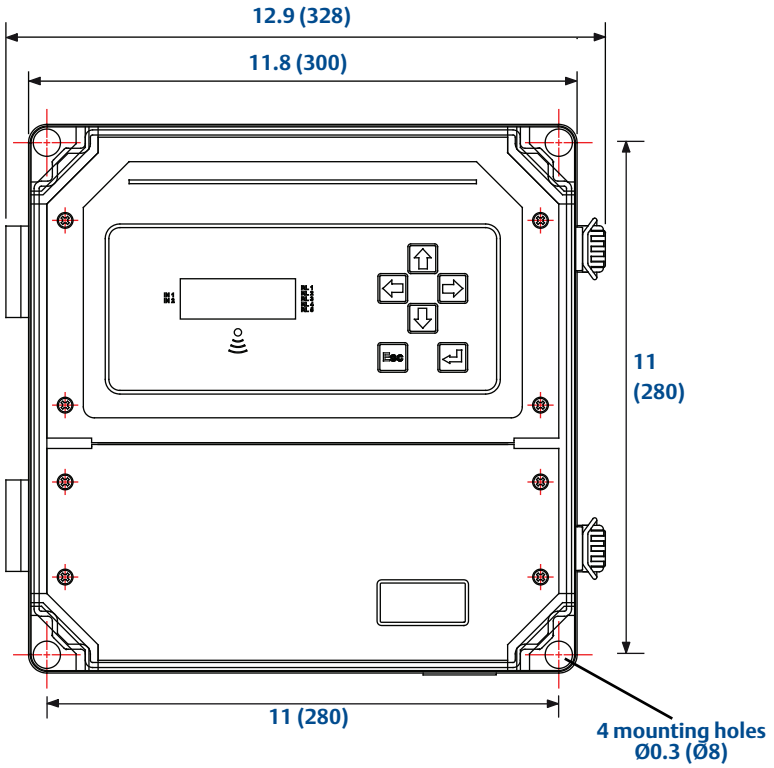

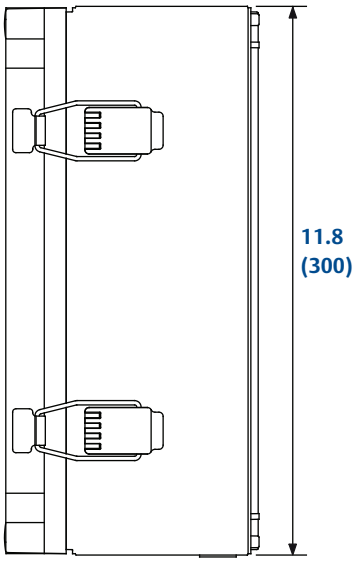

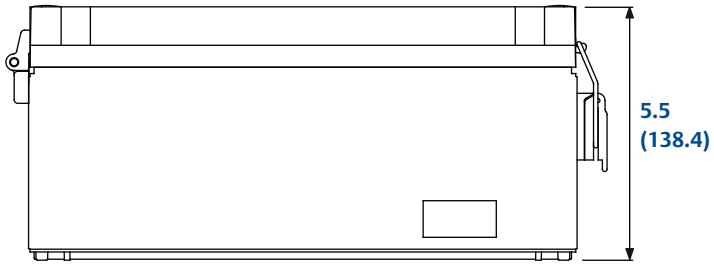



Panel mount unit

Note: Dimensions are in inches (mm).

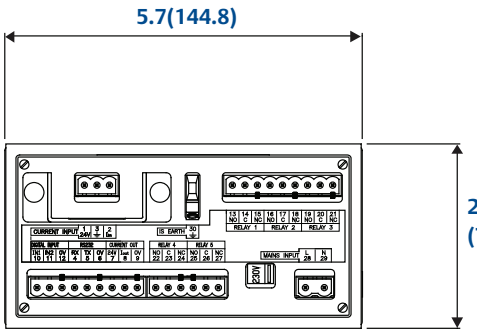

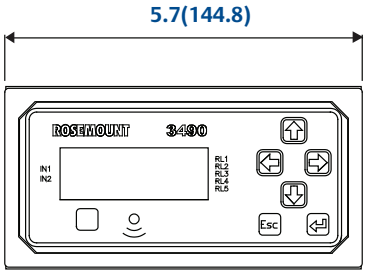

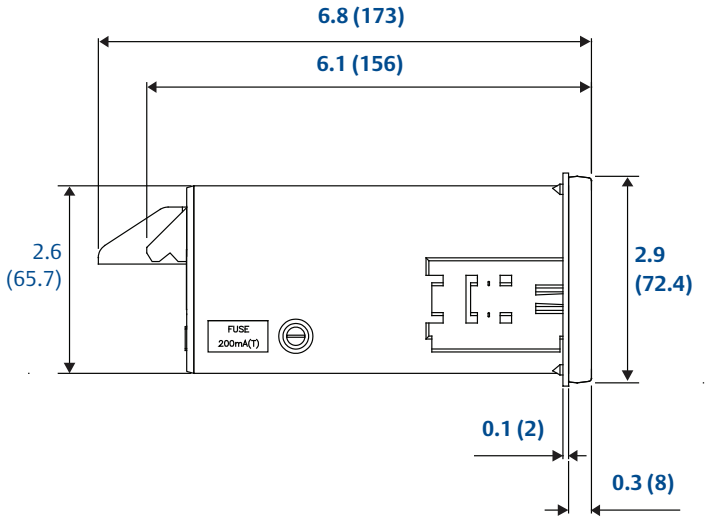

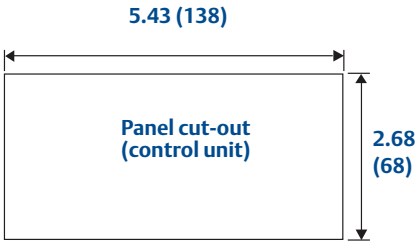

For safety, the panel should be strong enough to support the 1.2 kg (mains power) or 0.8 kg (DC power) mass of the unit.

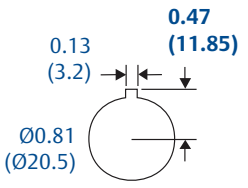

Panel cut-out (RS232 data down-load socket on 3493 only)



Emerson Process Management
Rosemount Inc.
8200 Market Boulevard
Chanhassen, MN 55317 USA
T (USA) 1 800 999 9307
T (International) +1 952 906 8888
F +1 952 906 8889
www.rosemount.com

Emerson FZE
P.O. Box 17033
Jebel Ali Free Zone
Dubai UAE
T +971 4 811 8100
F +971 4 886 5465
www.rosemount.com

Emerson Process Management
Latin America
1300 Concord Terrace, Suite 400
Sunrise Florida 33323 USA
T + 1 954 846 5030
www.rosemount.com

Emerson Process Management
Neuhofstrasse 19a
CH 6341 Baar
Switzerland
T +41 (0) 41 768 61 11
F +41 (0) 41 76 1 87 40
www.rosemount.com

Emerson Process Management
Asia Pacific Pte Ltd
1 Pandan Crescent
Signapore 128461
T +65 6777 8211
F +65 6777 0947
Service Support Hotline: +65 6770 8711
Email: Enquiries@AP.EmersonProcess.com
www.rosemount.com

Emerson Beijing Instrument Co
No. 6 North Street, Hepingli
Dongcheng District, Beijing
100013
China
T +8610 6428 2233
F +8610 64287640
www.rosemount.com

Standard Terms and Conditions of Sale can be found at www.rosemount.com\terms_of_sale
The Emerson logo is a trade mark and service mark of Emerson Electric Co.
Rosemount and the Rosemount logotype are registered trademarks of Rosemount Inc.
HART and WirelessHART are registered trademarks of the HART Communication Foundation
All other marks are the property of their respective owners.
© 2014 Rosemount Inc. All rights reserved.

ROSEMOUNT®

EMERSON™
Process Management