

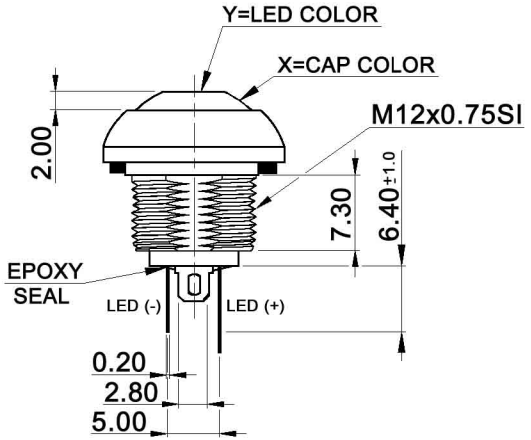

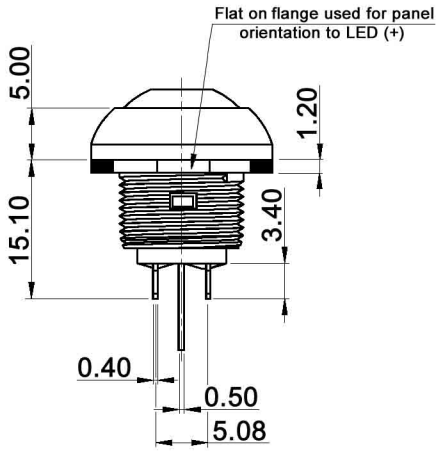

PANEL CUT-OUT

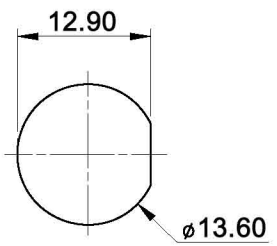

HARDWARE:

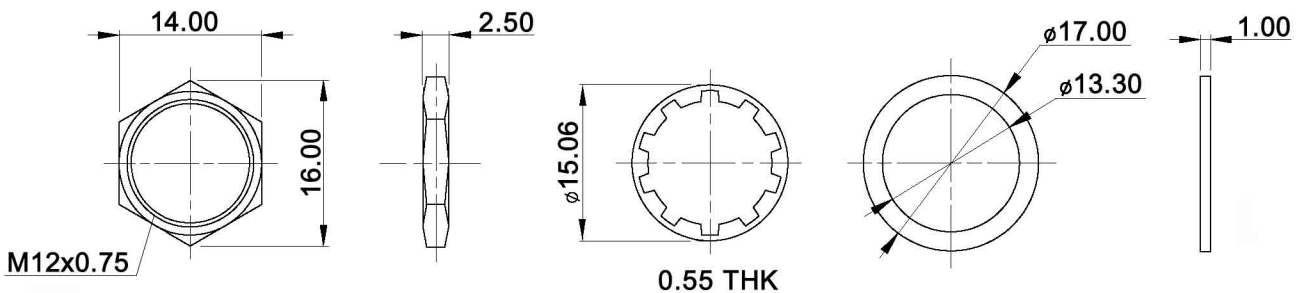

Tolerances: 0.00: ±0.25mm 0.0: ±0.40mm			Date	Name
			02/08	dr
LED colour table	06/10	dr		
Actuator color black	06/08	dr		
Operating temperature	04/08	dr		
Water proofing	04/08	dr		
Modifications	Date	Name		

DPWL 1 CG-xy

knitter-switch

30 13 72

Specifications:

Contact rating:	max.: 400mA, 32V AC; 100mA, 50V DC; 125mA, 125V AC
Contact resistance:	50mOhm max.
Insulation resistance:	1GOhm min at 500V DC
Dielectric strength:	1 000V AC RMS
Operating temperature:	-30°C to +85°C
Electrical life:	500 000 cycles at full load
Operating force:	2N - 5N
Contact bounce:	10 ms
Torque:	0.5Nm max. applied to nut
Soldering conditions:	300°C max., 3sec.
Total travel:	1.5mm
Panel thickness:	1.5mm min., 4.0mm max.
IP rating:	IP 67 (mounted)
Material:	Case: DAP UL94V-0
	Cap / bushing: polyamide 6/6
	Terminal / contacts: gold over silver plated

Lens appearance	Colour	Electro-optical data (at 20mA) Vf (V) Typ.	Vf (V) max.	Iv (mcd) Typ.	Iv (mcd) max.	Peak wavelength	Viewing angle
Water clear	white (at 5mA)	3.2	3.6	250.0	94.0	x=0.28 y=0.29	35°
	super red	1.7	2.6	60.0	28.0	660.0	
	super yellow	2.1	2.6	200.0	94.0	590.0	
	super green	2.0	2.6	100.0	42.0	570.0	
	super blue	3.2	3.6	150.0	63.0	470.0	
	super yellow / super green	2.1 / 2.0	2.6 / 2.6	200.0 / 80.0	94.0 / 42.0	590.0 / 570.0	
	super yellow / super blue	2.1 / 3.2	2.6 / 3.6	200.0 / 200.0	94.0 / 94.0	590.0 / 460.0	
	super yellow / super red	2.1 / 2.0	2.6 / 2.6	100.0 / 90.0	63.0 / 42.0	590.0 / 630.0	
	super red / super green	2.0 / 2.0	2.6 / 2.6	90.0 / 90.0	42.0 / 42.0	630.0 / 570.0	
	super red / super blue	2.0 / 3.2	2.6 / 3.6	90.0 / 200.0	42.0 / 94.0	630.0 / 460.0	
	super green / super blue	2.0 / 3.2	2.6 / 3.6	100.0 / 200.0	42.0 / 94.0	570.0 / 460.0	

X=CAP COLOR	
W	white
K	black
R	red
O	orange
Y	yellow
G	green
B	blue

Y=LED COLOR	
W	white
R	red
Y	yellow
G	green
B	blue
YG	yellow / green
YB	yellow / blue
YR	yellow / red
RG	red / green
RB	red / blue
GB	green / blue

SWITCH FUNCTION

Model No.	POS. 1	POS. 2
		
DPWL 1 CG	OFF	MOM
Term. Conn.	OPEN	SHORT

RoHS-conform EC 2002/95

Tolerances: 0.00: ±0.25mm 0.0: ±0.40mm	Date	Name
	02/08	dr

DPWL 1 CG-xy

knitter-switch

30 13 72

Page 2/2

Modifications	Date	Name