E20888

Mounting set for photoelectric sensors

SYSTEM COMPONENT OT BOLT

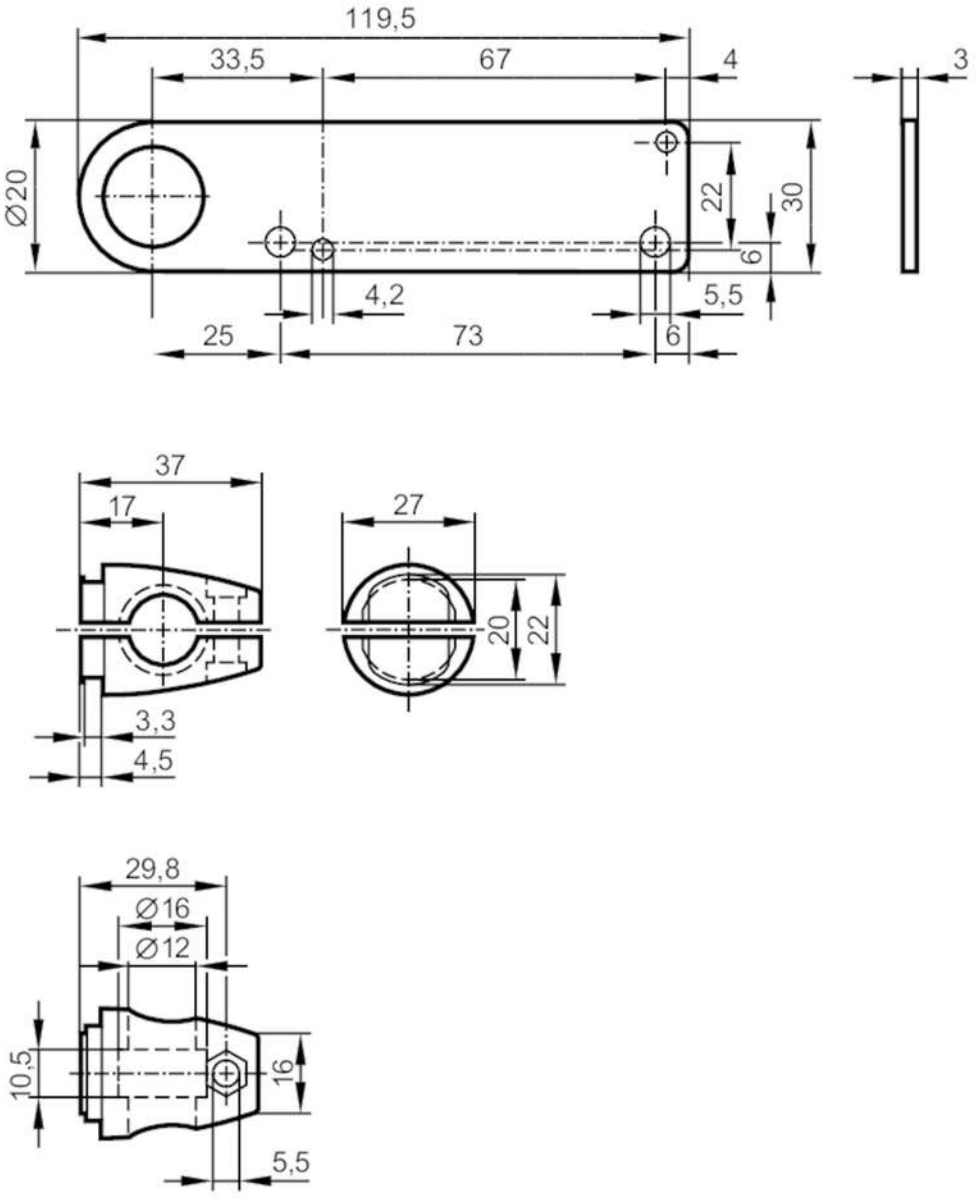

Application		
Design		clamp mounting
Mechanical data		
Weight	[g]	235
Type of mounting		free-standing; (M10)
Materials		fixture: stainless steel (1.4571/316Ti); Clamp: diecast zinc
Accessories		
Items supplied		head cap screw: 1 x M10 x 55
Remarks		
Pack quantity		1 pcs.