DEVR05 Series
HVDC Contactor 50A / 1000VDC



*Image is for illustrative purposes only. Please refer to datasheet for detail.

- HVDC 50A at 1000VDC
- Max. switching current = 300A
- Contacts sealed in inert gas
- Magnet arc blowout
- Pre-charge relay
- Female M4 power terminals
- Non-polarised (bi-directional) design

CE RoHS Compliant ✓

Contacts

Contact arrangement		SPST-NO-DM
Contact material		T2+Ag
Max. switching voltage	AC/DC	1000VDC
Rated load (resistive, cos φ=1)	DC1	50A 1000VDC
Max. continuous thermal current	600s	60A
	30s	85A
Max switching current	1 time only	300A 450VDC
Initial contact resistance	max.	30mΩ (at 1A)
	typ.	1mΩ (at 1A)

Coil

Nominal voltage (see page 2)	DC	12~48VDC
Rated power consumption	hold	3.2W @ 12VDC

Insulation

Insulation resistance	initial	100MΩ (min.)
	life end	50MΩ (max.)
Dielectric strength	coil to contact	3500Vrms / 10mA / 1 min (at sea level)
	contact to contact	3500Vrms / 10mA / 1 min (at sea level)

General Data

Operate time at 23°C	max.	30ms
Bounce time at 23°C	max.	7ms
Release time at 23°C	max.	12ms
Electrical life		Voltage and current dependent - see fig. 1
Mechanical life		2 x 10^5

Environmental

Environmental Seal		IP67
Ambient temperature	operating	-40 to +85°C
Relative humidity		5 to 95%RH
Shock resistance		20G peak, 11ms 1/2 sine
Vibration resistance		20G sine peak (80 to 2000Hz)
Dimensions	L x W x H	37.20 x 51.26 (over flanges) x 47.82 (approx.)
Weight	approx.	120g ±5g

Ordering Code

D E V R 0 5 - 5 0 8 1 - S 8 - 1 0 2 4 - R 1 / 1

Series

Coil code:
See table 1

Contact material
50: T2+Ag

Contact arrangement
81: SPST-NO (no polarity)

Mounting & terminations
Bottom flange mounting base
S8: M4 Female power terminals
Coil by flying leads

Coil wire length
R: 400mm (standard)
T: 5.9" (150mm)

Coil wire termination
1: None
2: Yazaki 7282-5558-10 Male, fitted to coil wires only.
Other terminations to special order

Version:
/1: Version 1

Specifications are subject to change without notice. E&OE.

Coil Data — Table 1

Coil code	Nominal voltage (VDC)	Must operate voltage max. (VDC at 23°C)	Max. allowable voltage (VDC)	Must release voltage min. (VDC)	Coil resistance Ω ±5% (at 23°C)	Coil Current (mA)	Coil power (W at 23°C)
1012	12.0	9.0	14.4	1.2	45.0	266.7	3.2
1024	24.0	18.0	28.0	2.4	167.0	143.7	3.5
1048	48.0	36.0	55.0	4.8	630.0	76.2	3.7

Electrical Performance — Fig. 1

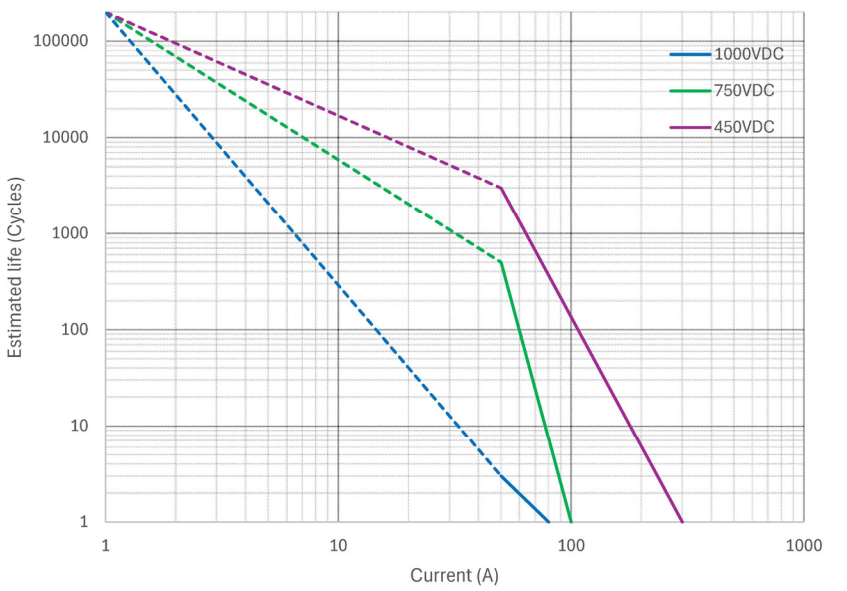

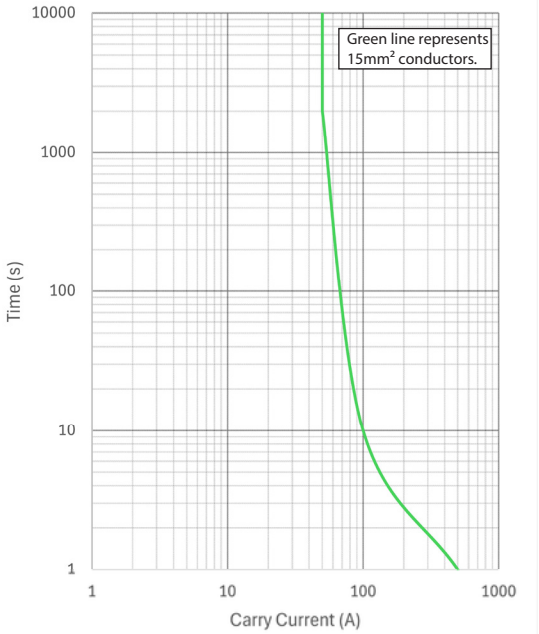

1. Estimates are based on test and extrapolated data (extrapoloated data can be seen with dotted line). The user is advised to confirm performance in their application.
2. Recommended conductor size and terminal temperature rise maximum in accordance with ISO (EN) 60947.1 70°C.
3. Estimated electrical life is based on make and break current.
4. All data is based on resistive loads.

Dimensions (mm) — Fig. 2

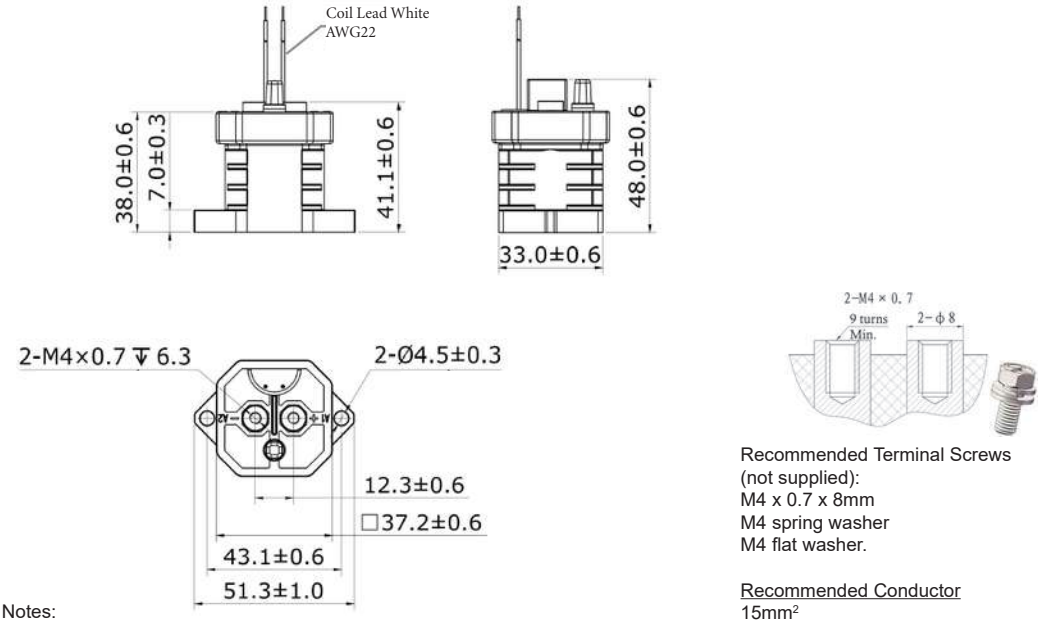

Recommended Terminal Screws (not supplied):
M4 x 0.7 x 8mm
M4 spring washer
M4 flat washer.

Recommended Conductor
15mm²

Torque settings
Terminals: 1.8 - 2.5Nm
Base Mounting: 1.8 - 2.5Nm

Notes:
1: Note coil is not polarised.
2: Nominal dimensions in mm.
3: Tolerances (nominal), <10mm: ± 0.3mm, 10 ~ 50mm: ± 0.6mm, >50mm: ± 1.0mm.
4: Coil wire length and terminations can be customised upon request.

Circuit Diagram — Fig. 3

Power Terminals

Non Polarised

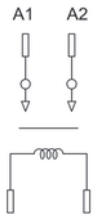

Coil is not polarised

Specifications are subject to change without notice. E&OE.