Springloaded latch with round bolt

Model : 16-1-3647



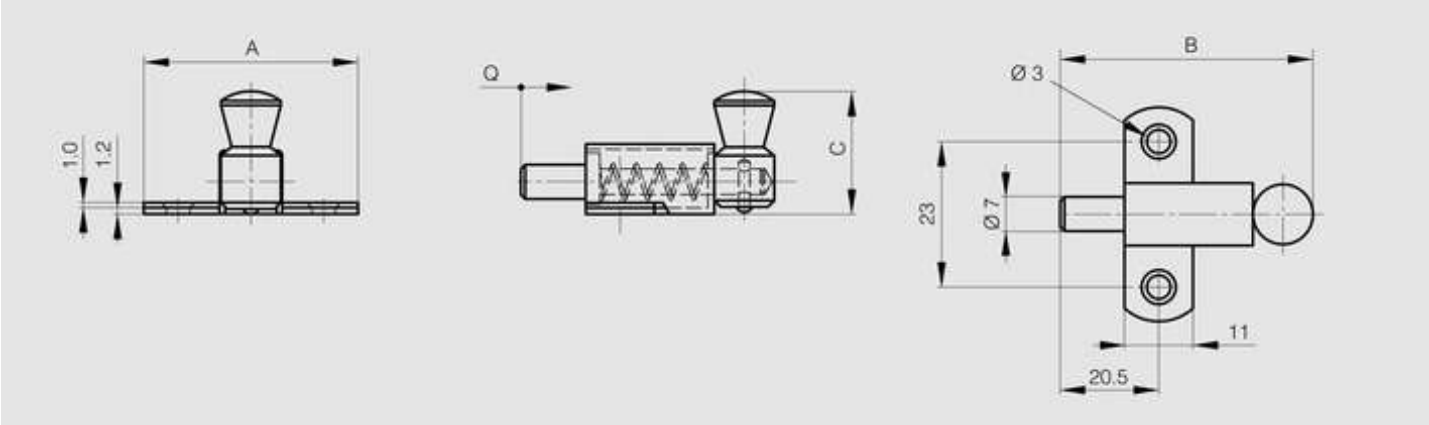

© PINET INDUSTRIE 2014

Material	steel
Finish	zinc plated
A (length)	35
B (width)	43.5
Weight (g)	21
Opening type	swinging
H	19
Locking option	spring loaded
K	10
S	3.5
Material	steel
Latching system	sliding latches

© PINET INDUSTRIE 2014