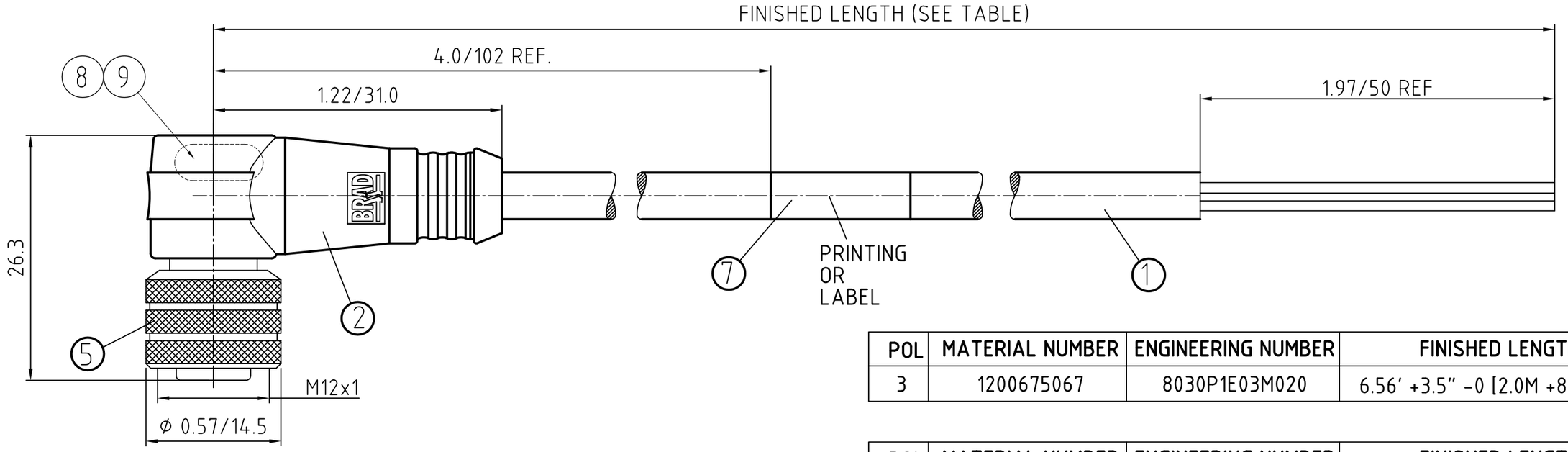

POL	MATERIAL NUMBER	ENGINEERING NUMBER	FINISHED LENGTH
3	1200675067	8030P1E03M020	6.56' +3.5" -0 [2.0M +89 -0]

POL	MATERIAL NUMBER	ENGINEERING NUMBER	FINISHED LENGTH
4	1200675014	8040P1E03M020	6.56' +3.5" -0 [2.0M +89 -0]

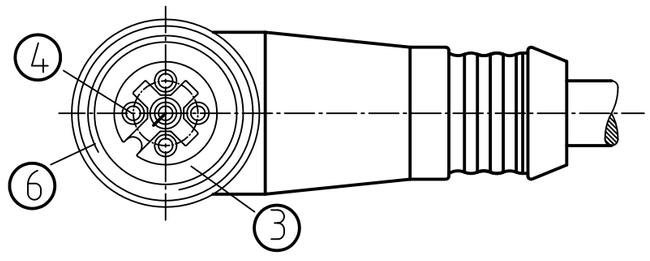

CONNECTOR SPECIFICATION:

VOLTAGE RATING	10 TO 30VDC
AMPERAGE RATING	max. 4 AMPS
PROTECTION	IP67
OPERATING TEMPERATURE	FLEXING: -5°C TO +80°C STATIC: -30°C TO +80°C

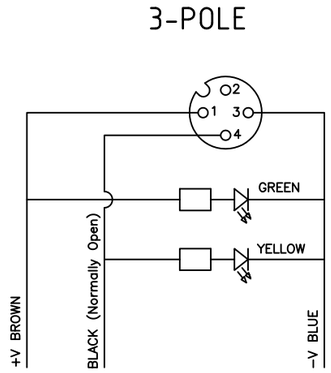

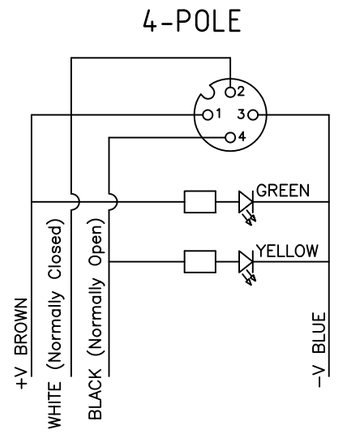

ITEM	COMPONENT	MATERIAL	FINISH
9	LED		GREEN
8	LED		YELLOW
7	LABLE	MYLAR	BLACK/YELLOW
6	O-RING	VITON	RED
5	COUPLER	BRASS	NICKEL PLATED
4	PIN CONTACT	COPPER ALLOY	GOLD OVER NICKEL
3	INSERT	PUR	BLACK
2	OVERMOLD	POLYURETHANE (PUR)	TRANSP.
1	CABLE- 22/3-5 (COPPER STRANDING) 3/4/5 CONDUCT. 300V	JACKET: PUR	BLACK

FEMALE FACE VIEW	FEMALE FACE VIEW
3-POLE	4-POLE
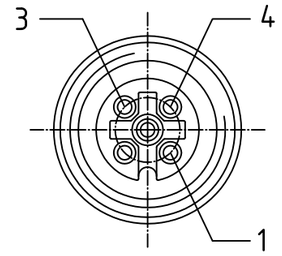	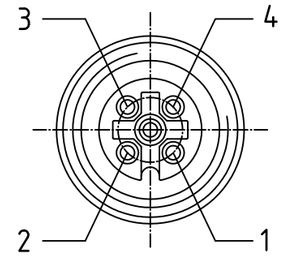
WIRING DIAGRAM	WIRING DIAGRAM
1 BROWN 2 NOT USED 3 BLUE 4 BLACK	1 BROWN 2 WHITE 3 BLUE 4 BLACK

DESCRIPTION
EC NO: WEU2010-0318 2010/02/03
DRWN: BBRAUCH 2010/02/03
CH'KD: NS ----
APPR: NSTAUDIG 2010/02/05
DESCRIPTION
1
REV

QUALITY SYMBOLS
▼ = 0
Ⓒ = 0

GENERAL TOLERANCES (UNLESS SPECIFIED)

	mm	INCH
4 PLACES	±---	±---
3 PLACES	±---	±---
2 PLACES	±---	±0.1
1 PLACE	±0.3	±---
ANGULAR ± --- °		

DRAFT WHERE APPLICABLE MUST REMAIN WITHIN DIMENSIONS

DIMENSION STYLE: IN/MM
SCALE: 2:1
DESIGN UNITS: METRIC
THIRD ANGLE PROJECTION

DRAWN BY: BBRAUCH DATE: 2010/02/03
CHECKED BY: NS DATE: 2010/02/04
APPROVED BY: NSTAUDIG DATE: 2010/02/04

MMC 3/4POL FE 90 PNP
22/4 BLACK PUR CABLE

MOLEX INCORPORATED

MATERIAL NO.: SEE TABLE
DOCUMENT NO.: SD-120067-017
SHEET NO.: 1 OF 1
SIZE: A3

THIS DRAWING CONTAINS INFORMATION THAT IS PROPRIETARY TO MOLEX INCORPORATED AND SHOULD NOT BE USED WITHOUT WRITTEN PERMISSION