MALE END VIEW

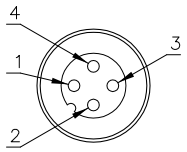

SPECIFICATIONS

HOUSING MATERIAL/PLATING	NYLON/BLACK
CONTACT MATERIAL/PLATING	BRASS/OPTALOY
COUPLING NUT MATERIAL/PLATING	BRASS/NICKEL
RATED CURRENT [A]	4.0 A
RATED VOLTAGE [V]	250 V
MAXIMUM WIRE SIZE	18 AWG
CABLE GRIP RANGE	6–8mm
TEMPERATURE RATING	–25°C to +85°C (–13°F to +185°F)
PROTECTION CLASS	IEC IP67
TERMINATION TYPE	SCREW TERMINAL

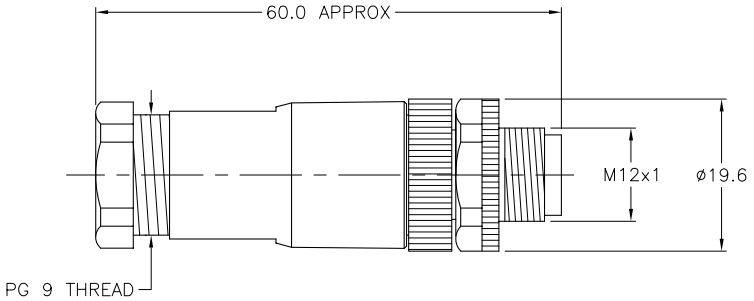

SOURCE DRAWING - FOR REFERENCE ONLY

REV	DESCRIPTION	BY	DATE	ECO NO.
D	UPDATE CONTACT MATERIAL, SEE ECO	RWC	12/02/09	29126

RELATED DOCUMENTS
1.
2.
3.
4.

3RD ANGLE PROJECTION

THIS DRAWING IS PROPERTY OF TURCK INC. USE OF THIS DOCUMENT WITHOUT WRITTEN PERMISSION IS PROHIBITED.

TURCK INC
High Technology Sensors and Automation Controls
3000 CAMPUS DRIVE
MINNEAPOLIS, MN 55441
1–800–544–7769
(763) 553–7300
(763) 553–0708 fax
turck.com

MATERIAL: SEE SPECIFICATIONS

FINISH: SEE SPECIFICATIONS

ALL DIMENSIONS DISPLAYED ON THIS DRAWING ARE FOR REFERENCE ONLY

CONTACT TURCK FOR MORE INFORMATION

DRFT: RDS | DATE: 11/22/04

DSGN: | SCALE: 1=1.0

UNIT OF MEASUREMENT
MILLIMETERS

DO NOT SCALE THIS DRAWING

DESCRIPTION: BS 8141–0/PG 9

IDENTIFICATION NO.: U6551 | REV: D

FILE: U6551 | SHEET 1 OF 1