Angular contact ball bearings

3208-BD-XL-2HRS-TVH (Series 32..-BD-2HRS)

main dimensions to DIN 628-3, double row, lip seals on both sides, contact angle α = 30°

The datasheet is only an overview of dimensions and basic load ratings of the selected product. Please always observe all the guidelines in these overview pages. Further information is given on many products under the menu item "Description". You can also order comprehensive information via the Catalogue selection system (http://www.fag.de/content.fag.de/en/mediathek/library/library.jsp) or by telephone on +49 (91 32) 82 - 28 97.

d	40	mm	
D	80	mm	
B	30,2	mm	
a	47,4	mm	
D_2	72,6	mm	
d_2	52,8	mm	
$D_{a\ max}$	73	mm	
$d_{a\ min}$	47	mm	
$r_{a\ max}$	1	mm	
r_{min}	1,1	mm	
α	30	°	Contact angle
m	0,597	kg	Mass
C_r	51000	N	Basic dynamic load rating, radial
C_{0r}	38000	N	Basic static load rating, radial
C_{ur}	2550	N	Fatigue limit load, radial
n_G	6700	1/min	Limiting speed

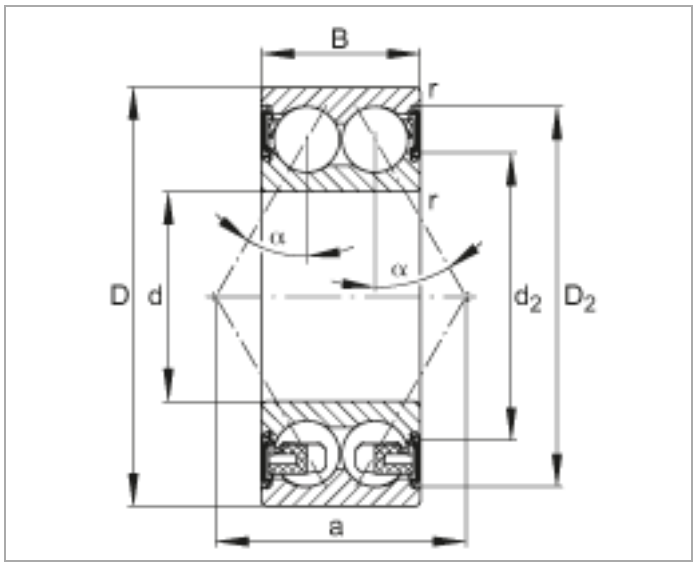
B
r
r
α
α
D
d
d2
D2
a

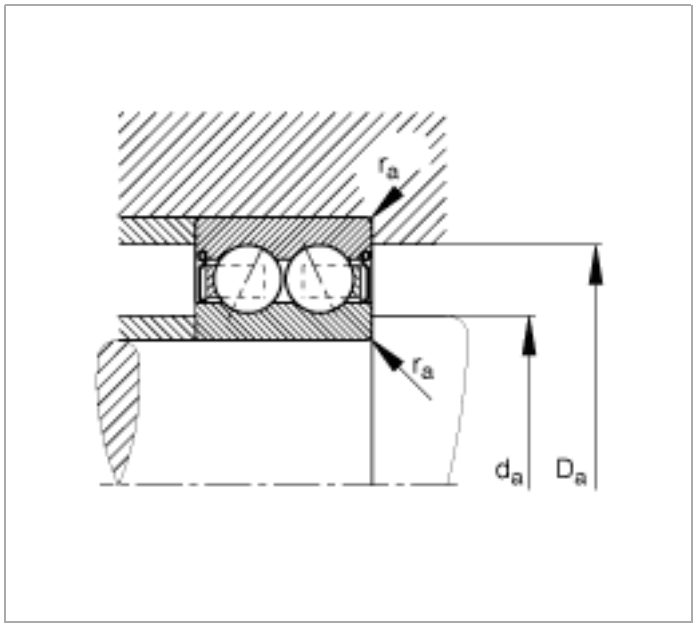
ra
ra
da
Da