213436
OGU 010 G3-T3/V4A
Fork light barrier

- Stainless steel housing for use in the food and beverage industry
- 4 operating modes as an IO-Link parameter
- Switch-on/off delay as an IO-Link parameter
- Diagnostics with IO-Link
- Sensitivity is adjustable
- High switching frequency
- Light/dark switching
- Bright ring LED
- High protection type
- 5-year warranty



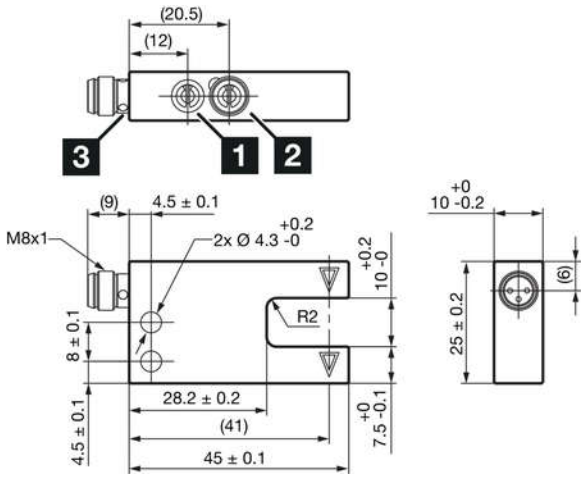

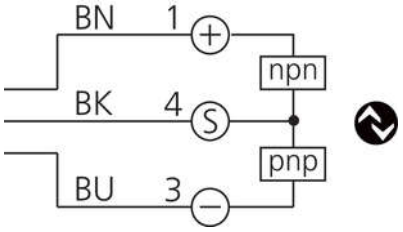

1) Potentiometer
2) NO/ NC
3) LED

BK: black BN: brown BU: blue

Function

Technical data (typ.)	+20°C, 24 V DC
Service voltage	10 … 30 V DC
No-load current (max.)	30 mA
Insulation voltage endurance	500 V
Leg length internal	16,8 mm
Housing dimensions	25 x 45 x 10 mm
Housing length	45 mm
Housing height	25 mm
Housing width	10 mm
Housing material	Stainless steel
Protection class	III, operation on protective low voltage
Operating principle	Optical
Evaluation	digital
Design	Fork
Operation modes	STANDARD, HIGH RESOLUTION, POWER, SPEED
Switching output	Push-pull, 100 mA, NO/NC, switchable
Interface	IO-Link (V1.1, COM2 38.4 kBd, Smart Sensor Profile)
Light source	LED
Color	Infrared
Modulation	Clocked
Fork opening	10 mm

di-soric GmbH & Co. KG . Steinbeisstraße 6 . DE-73660 Urbach . www.di-soric.com

213436
OGU 010 G3-T3/V4A
Fork light barrier

Technical data (typ.)	+20°C, 24 V DC
Resolution (factory setting)	0,2 mm (STANDARD)
Reproducibility (factory setting)	0,02 mm (STANDARD)
Resolution (STANDARD)	0,2 mm
Reproducibility (STANDARD)	0,02 mm
Resolution (HIGH RESOLUTION)	0,1 mm
Reproducibility (HIGH RESOLUTION)	0,02 mm
Resolution (POWER)	1 mm
Reproducibility (POWER)	0,02 mm
Resolution (SPEED)	0,2 mm
Sensitivity adjustment	Potentiometer or IO-Link
Switching frequency (factory setting)	10.000 Hz (STANDARD)
Switching frequency (STANDARD)	10.000 Hz
Switching frequency (HIGH RESOLUTION)	5.000 Hz
Switching frequency (POWER)	250 Hz
Switching frequency (SPEED)	14.000 Hz
Ambient temperature during operation	-25 … +60 °C
Protection type	IP 67
Connection	Connector, M8, 3-pin
Connection cable	TK …

More information / accessories	https://www.di-soric.com/213436

© di-soric . Right to change reserved