Brand of NTN corporation

Technical data

UKP210H

Bearing units



Grey cast housing, radial insert ball bearing with adapter sleeve,seal with slinger

KIT CONTENT

UK210G2H, P210

VISUAL (S)

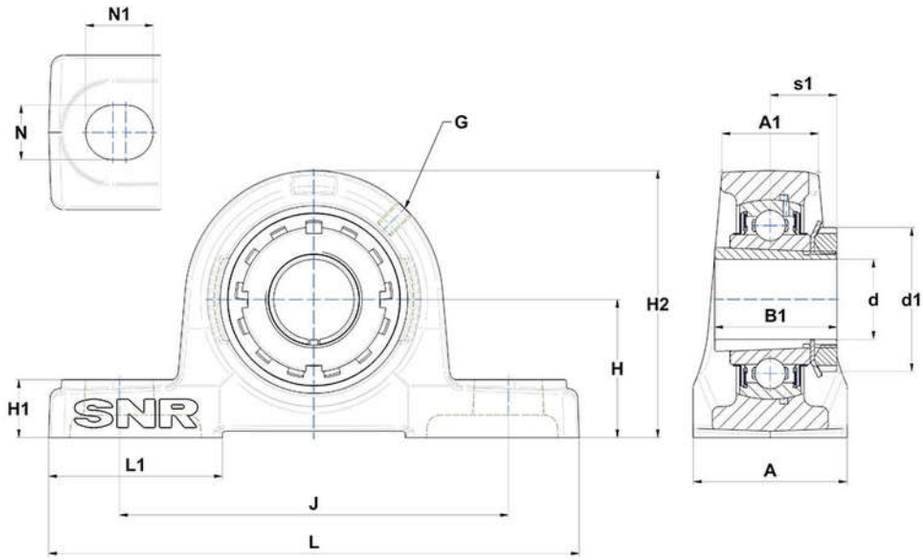

PRODUCT DEFINITION

Brand	SNR
A - Housing width	60 mm
A1 - Housing top width	39 mm
B - Width of Inner Ring	31 mm
d - Shaft diameter	45 mm
d1 - Outer dia of eccent. Lock. collar / nut of adapter sleeve	70 mm

NTN Europe
1 rue des Usines · BP 2017 · 74010 Annecy Cedex · France · Tel. +33 (0)4 50 65 30 00
S.A. au capital de 322 639 919 € · RCS ANNECY B 325 821 072 · Id. Fiscale : FR 48 325 821 072
SIRET 325 821 072 00015 · Code APE 2815 Z · Code NACE 28.15

PRODUCT DEFINITION	
G - Grease fitting	M6x1
H - Distance mounting base to centerline spheric. seating diam.	57,2 mm
H1 - Housing foot height	22 mm
H2 - Housing height	114 mm
J - Mounting holes distance	159 mm
L - Housing length	206 mm
L1 - Housing foot length	65 mm
N - Mounting hole dimension	20 mm
N1 - Mounting hole length	25 mm
s1 - Distance nut to middle of bearing raceway	27,5 mm

PRODUCT PERFORMANCE	
C - Dynamic load rating	35100000 mN
C0 - Static load rating	23200000 mN
Operating temperature min.	253,15 °K
Operating temperature max.	373,15 °K

OTHER FEATURES	
Mass	3,13 kg
Adapter sleeve designation	H2310