

Retroreflective sensor

OBR6000-R103-2EP-IO-V31

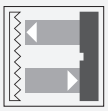

- Miniature design with versatile mounting options
- Extended temperature range
  -40 °C ... 60 °C
- High degree of protection IP69K
- IO-Link interface for service and process data

Retroreflective sensor with polarization filter

Function

The R103 series miniature optical sensors are the first devices of their kind to offer an endto- end solution in a small single standard design — from thru-beam sensor through to a distance measurement device. As a result of this design, the sensors are able to perform practically all standard automation tasks.
The entire series enables sensors to communicate via IO-Link.
The DuraBeam laser sensors are durable and can be used in the same way as a standard sensor.
The use of Multi Pixel Technology gives the standard sensors a high level of flexibility and enables them to adapt more effectively to their operating environment.

Release date: 2023-03-28 Date of issue: 2023-03-28 Filename: 267075-100275_eng.pdf

Dimensions

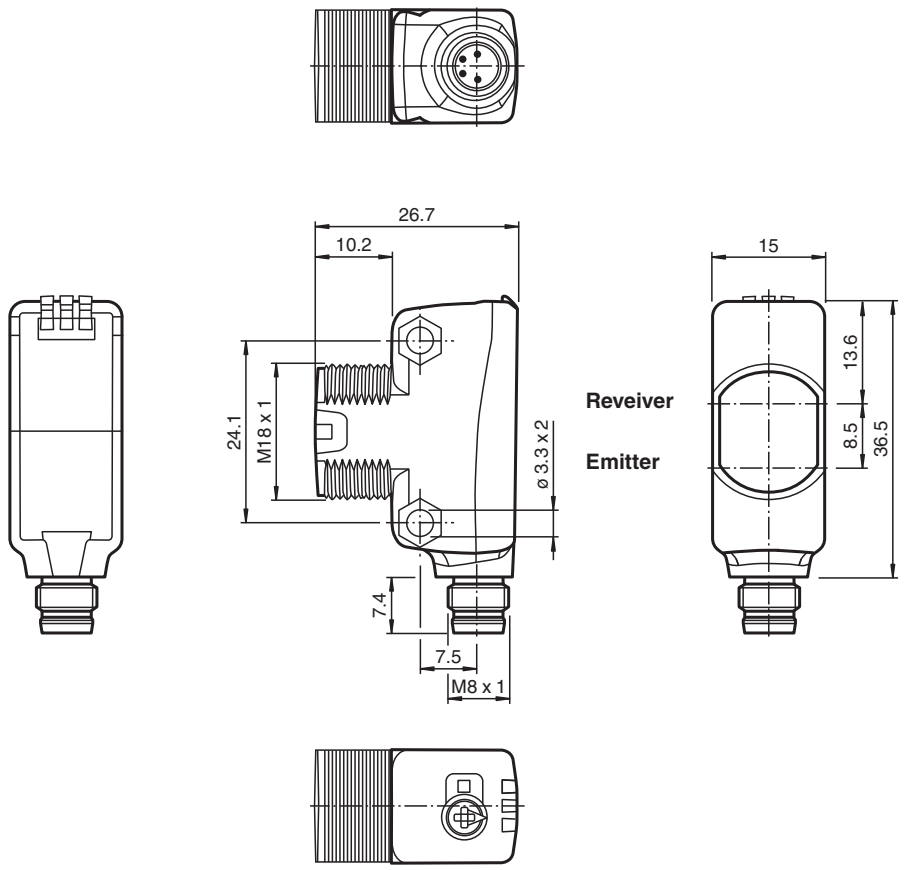

Technical Data

General specifications	
Effective detection range	0 ... 6 m
Reflector distance	0.03 ... 6 m
Threshold detection range	8 m
Reference target	H85-2 reflector
Light source	LED
Light type	modulated visible red light
LED risk group labelling	exempt group
Polarization filter	yes
Diameter of the light spot	approx. 65 mm at a distance of 1 m
Opening angle	3.7 °
Ambient light limit	EN 60947-5-2
Functional safety related parameters	
$MTTF_d$	724 a
Mission Time (T_M)	20 a
Diagnostic Coverage (DC)	0 %
Indicators/operating means	
Operation indicator	LED green: constantly on - power on flashing (4Hz) - short circuit flashing with short break (1 Hz) - IO-Link mode

Release date: 2023-03-28 Date of issue: 2023-03-28 Filename: 267075-100275_eng.pdf

Technical Data

Function indicator		Yellow LED: Permanently lit - light path clear Permanently off - object detected Flashing (4 Hz) - insufficient operating reserve
Control elements		Light-on/dark-on changeover switch
Control elements		sensitivity adjustment
Parameterization indicator		IO link communication: green LED goes out briefly (1 Hz)
Electrical specifications		
Operating voltage	U_B	10 ... 30 V DC
Ripple		max. 10 %
No-load supply current	I_0	< 25 mA at 24 V supply voltage
Protection class		III
Interface		
Interface type		IO-Link (via C/Q = pin 4)
IO-Link revision		1.1
Device ID		0x110204 (1114628)
Transfer rate		COM2 (38.4 kBit/s)
Min. cycle time		2.3 ms
Process data width		Process data input 2 Bit Process data output 2 Bit
SIO mode support		yes
Compatible master port type		A
Output		
Switching type		The switching type of the sensor is adjustable. The default setting is: C/Q - Pin4: NPN normally open / dark-on, PNP normally closed / light-on, IO-Link /Q - Pin2: NPN normally closed / light-on, PNP normally open / dark-on
Signal output		2 push-pull (4 in 1) outputs, short-circuit protected, reverse polarity protected, overvoltage protected
Switching voltage		max. 30 V DC
Switching current		max. 100 mA , resistive load
Usage category		DC-12 and DC-13
Voltage drop	U_d	≤ 1.5 V DC
Switching frequency	f	1000 Hz
Response time		0.5 ms
Conformity		
Communication interface		IEC 61131-9
Product standard		EN 60947-5-2
Approvals and certificates		
UL approval		E87056 , cULus Listed , class 2 power supply , type rating 1
Ambient conditions		
Ambient temperature		-40 ... 60 °C (-40 ... 140 °F)
Storage temperature		-40 ... 70 °C (-40 ... 158 °F)
Mechanical specifications		
Housing width		15 mm
Housing height		43.9 mm
Housing depth		26.7 mm
Degree of protection		IP67 / IP69 / IP69K
Connection		M8 x 1 connector, 4-pin
Material		
Housing		PC (Polycarbonate)
Optical face		PMMA
Mass		approx. 12 g

Release date: 2023-03-28 Date of issue: 2023-03-28 Filename: 267075-100275_eng.pdf

Connection

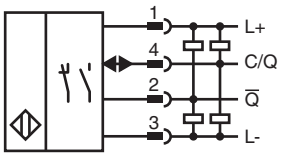

Connection Assignment



Wire colors in accordance with EN 60947-5-2

1	BN	(brown)
2	WH	(white)
3	BU	(blue)
4	BK	(black)

Assembly

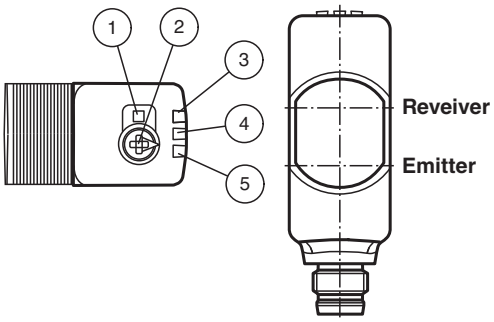

1	Light-on/dark-on changeover switch
2	Sensitivity adjuster
3	Operating indicator / dark on
4	Function indicator
5	Operating indicator / light on

Release date: 2023-03-28 Date of issue: 2023-03-28 Filename: 267075-100275_eng.pdf

Characteristic Curve

Characteristic response curve

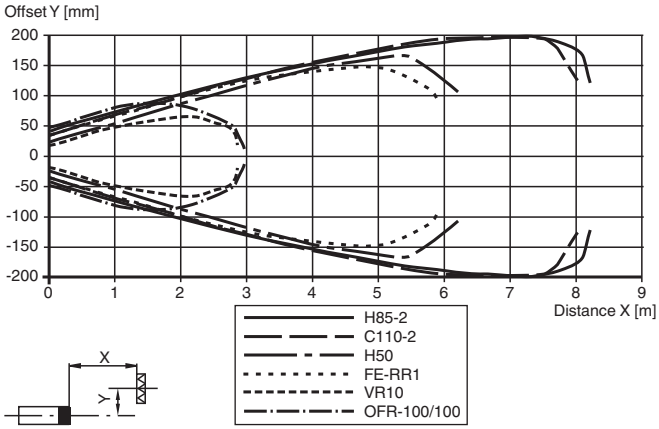

Relative received light strength

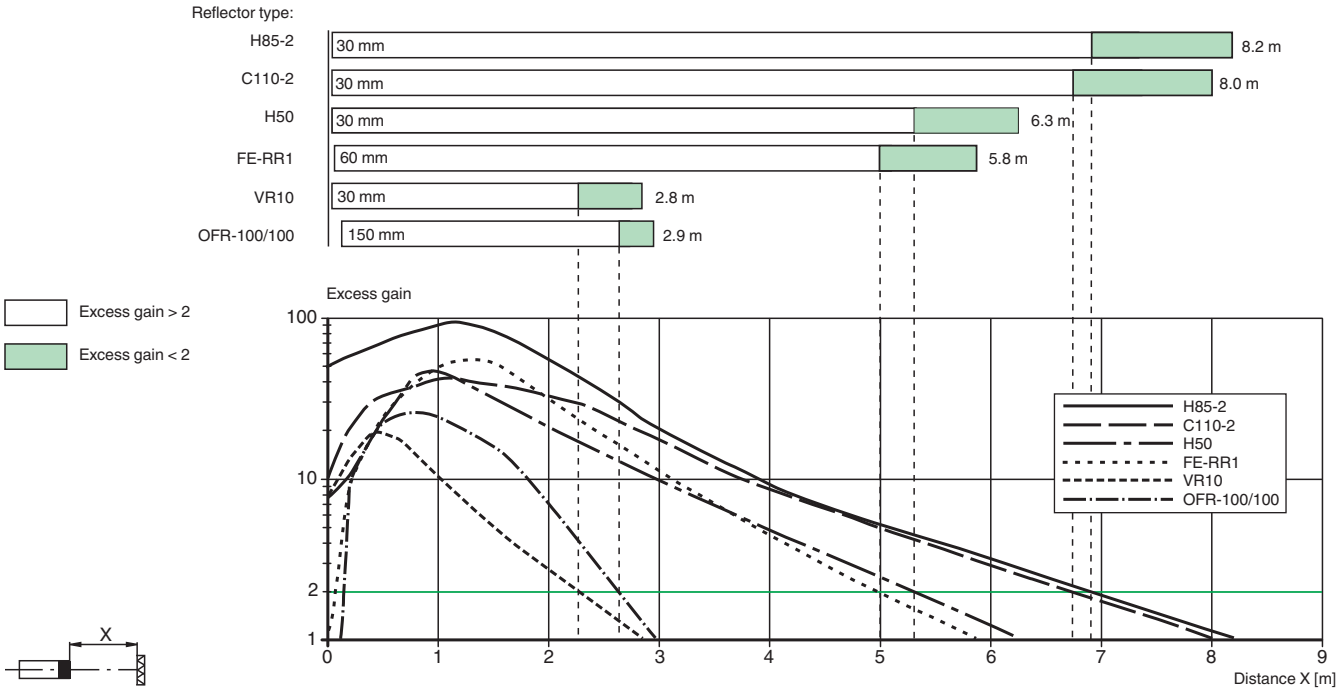

Accessories

	**OMH-ML100-09**	Mounting aid for round steel ø 12 mm or sheet 1.5 mm ... 3 mm
	**OMH-R103-01**	Mounting bracket
	**OFR-100/100**	Reflective tape 100 mm x 100 mm
	**REF-H33**	Reflector with screw fixing
	**REF-H50**	Reflector, rectangular 51 mm x 61 mm, mounting holes, fixing strap

Release date: 2023-03-28 Date of issue: 2023-03-28 Filename: 267075-100275_eng.pdf

Accessories

	**REF-H85-2**	Reflector, rectangular 84.5 mm x 84.5 mm, mounting holes
	**REF-VR10**	Reflector, rectangular 60 mm x 19 mm, mounting holes
	**OMH-ML6**	Mounting bracket
	**OMH-ML6-U**	Mounting bracket
	**OMH-ML6-Z**	Mounting bracket
	**OMH-R10X-01**	Mounting bracket
	**OMH-R10X-04**	Mounting bracket
	**OMH-R10X-10**	Mounting bracket
	**OMH-ML100-031**	Mounting aid for round steel ø 10 ... 14 mm or sheet 1 mm ... 5 mm
	**OMH-ML100-03**	Mounting aid for round steel ø 12 mm or sheet 1.5 mm ... 3 mm
	**ICE2-8IOL-G65L-V1D**	EtherNet/IP IO-Link master with 8 inputs/outputs
	**ICE3-8IOL-G65L-V1D**	PROFINET IO IO-Link master with 8 inputs/outputs
	**ICE1-8IOL-G30L-V1D**	Ethernet IO-Link module with 8 inputs/outputs
	**ICE1-8IOL-G60L-V1D**	Ethernet IO-Link module with 8 inputs/outputs
	**ICE2-8IOL-K45P-RJ45**	EtherNet/IP IO-Link master with 8 inputs/outputs, DIN rail, push-in connectors
	**ICE2-8IOL-K45S-RJ45**	EtherNet/IP IO-Link master with 8 inputs/outputs, DIN rail, screw terminal
	**ICE3-8IOL-K45P-RJ45**	PROFINET IO IO-Link master with 8 inputs/outputs, DIN rail, push-in terminals
	**ICE3-8IOL-K45S-RJ45**	PROFINET IO IO-Link master with 8 inputs/outputs, DIN rail, screw terminal
	**IO-Link-Master02-USB**	IO-Link master, supply via USB port or separate power supply, LED indicators, M12 plug for sensor connection
	**V31-GM-2M-PUR**	Female cordset single-ended M8 straight A-coded, 4-pin, PUR cable grey

Release date: 2023-03-28 Date of issue: 2023-03-28 Filename: 267075-100275_eng.pdf

Accessories

	**V31-WM-2M-PUR**	Female cordset single-ended M8 angled A-coded, 4-pin, PUR cable grey

Release date: 2023-03-28 Date of issue: 2023-03-28 Filename: 267075-100275_eng.pdf

Configuration

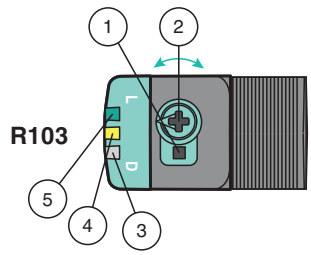

1 - Light-on / dark-on changeover switch
2 - Sensing range / sensitivity adjuster
3 - Operating indicator / dark on
4 - Signal indicator
5 - Operating indicator / light on

To unlock the adjustment functions turn the sensing range adjuster / sensitivity adjuster for more than 180 degrees.

Sensing Range/ Sensitivity

Turn sensing range / sensitivity adjuster clockwise to increase sensing range / sensitivity.

Turn sensing range / sensitivity adjuster counter clockwise to decrease sensing range / sensitivity.

If the end of the adjustment range is reached, the signal indicator starts flashing with 8 Hz.

Light-on / Dark-on Configuration

Press the light-on / dark-on changeover switch for more than 1 second (less than 4 seconds). The light-on / dark-on mode changes and the operating indicators are activated accordingly.

If you press the light-on / dark-on changeover switch for more than 4 seconds, the light-on /dark-on mode changes back to the original setting. On release of the light-on / dark-on changeover switch the current state is activated.

Restore Factory Settings

Press the light-on / dark-on changeover switch for more than 10 seconds (less than 30 seconds) until all LEDs turn off. On release of the light-on / dark-on changeover switch the signal indicator turns on. After 5 seconds the sensor resumes operation with factory default settings.

After 5 minutes of inactivity the sensing range / sensitivity adjustment is locked. In order to reactivate the sensing range / sensitivity adjustment, turn the sensing range / sensitivity adjuster for more than 180 degrees.

Release date: 2023-03-28 Date of issue: 2023-03-28 Filename: 267075-100275_eng.pdf