Top View of Assembly

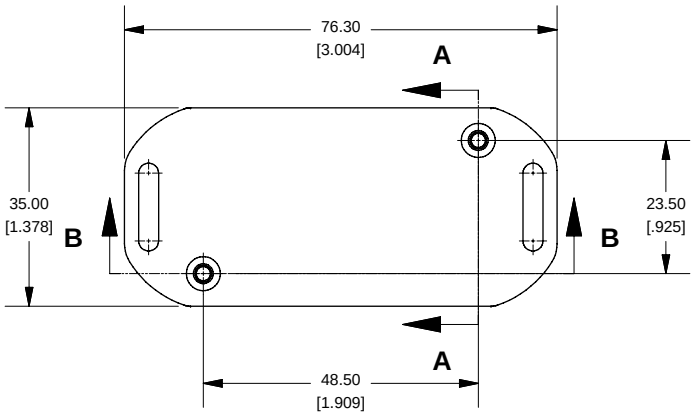

SECTION A-A
End View of Assembly

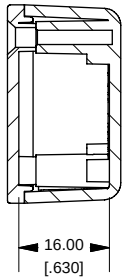

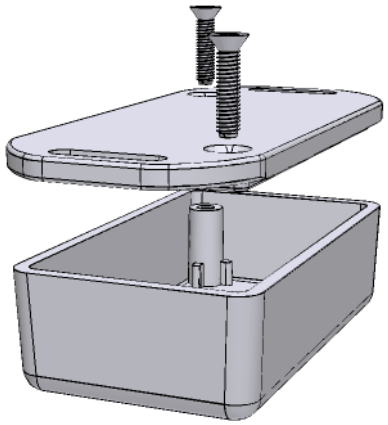

SECTION B-B
Side View of Assembly

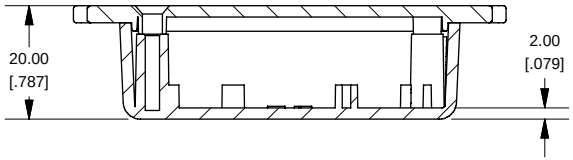

Top View Looking Inside Box

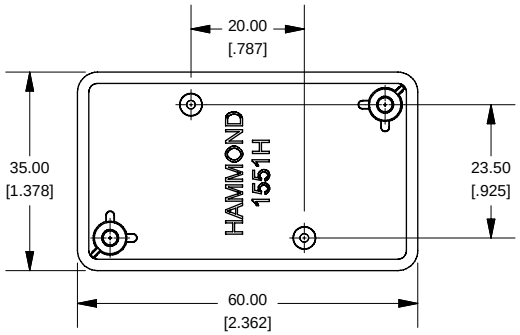

NOTE

Purchased assembly includes lid and box made from GP ABS material and cover screws.

Lid

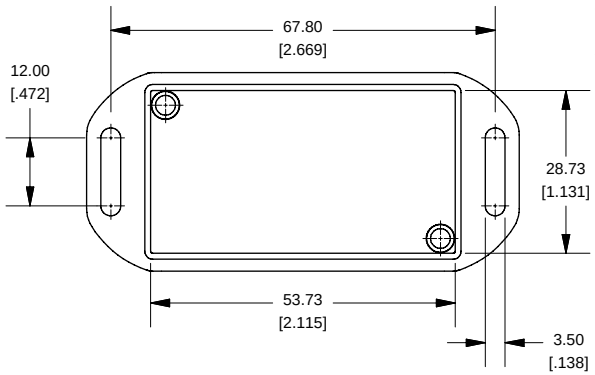

SECTION C-C
Boss Heights

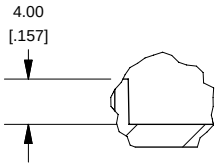

Maximum P.C. Board Size

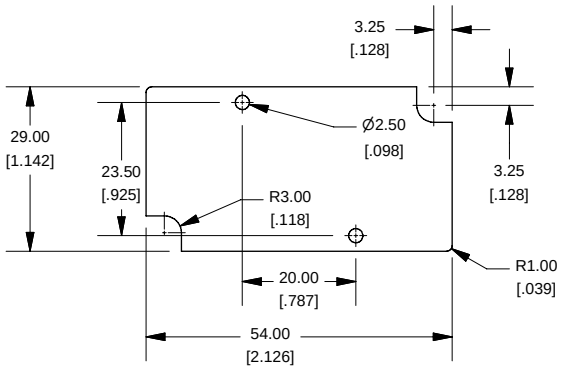

1551HFL	
1551HFL Enclosure	
Black Enclosure - RAL 9011 - UL94 - HB	1551HFLBK
Gray Enclosure - RAL 7035 - UL94 - HB	1551HFLGY
Translucent Blue - UL94 - HB	1551HFLTBU
ACCESSORIES	
Recommended Screw Torque: 15-20 ozf.in (10-15 cN.m)	
Black Enclosure Cover Screws (Pkg 100) [#4 X 1/2" Self Tapping]	1591TS100BK
Grey Enclosure Cover Screws (Pkg 100) [#4 X 1/2" Self Tapping]	1591TS100
P.C. Board Screws (Pkg 100) [#2 x 3/16" Self Tapping]	1551ATS100

HAMMOND MANUFACTURING™

1551HFL

www.hammondmfg.com