PFT 20 TF

Housing material	Pressed steel

Dimensions

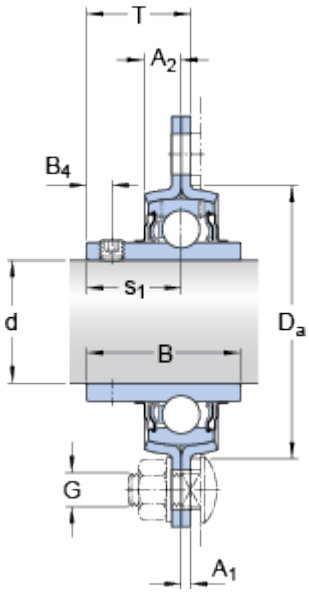

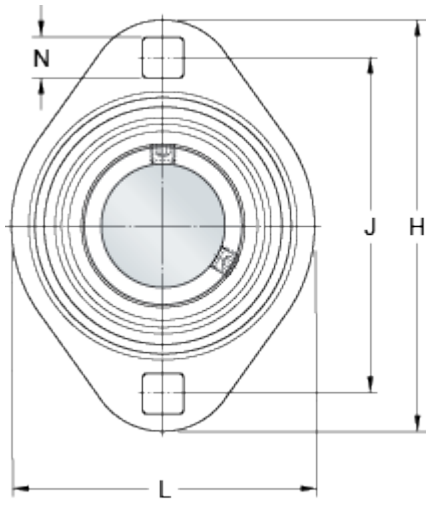

d		20	mm
A_1		2	mm
A_2		8	mm
B		31	mm
B_4		4.5	mm
D_a	min.	51	mm
J		71.4	mm
H		91	mm
L		67	mm
N		8.7	mm
s_1		18.3	mm
T		20.3	mm

Dowel pins

Grease fitting

Threaded hole

Calculation data

Basic dynamic load rating	C	12.7	kN
Basic static load rating	C_0	6.6	kN
Fatigue load limit	P_u	0.28	kN
Limiting speed		8500	r/min

(with shaft tolerance h6)

Mass

Mass bearing unit	0.24	kg

Mounting information

Thread grub screw	G_2	M6x0.75	
Hexagonal key size for grub screw	N	3	mm
Recommended tightening torque for grub screw		4	N·m
Recommended diameter for attachment bolts, mm	G	8	mm
Recommended diameter for attachment bolts, inch	G	0.313	in

Appertaining products

Housing	PFT 47
Bearing	YAR 204-2F