The Mistral

herga

Industrial Foot Air Valve

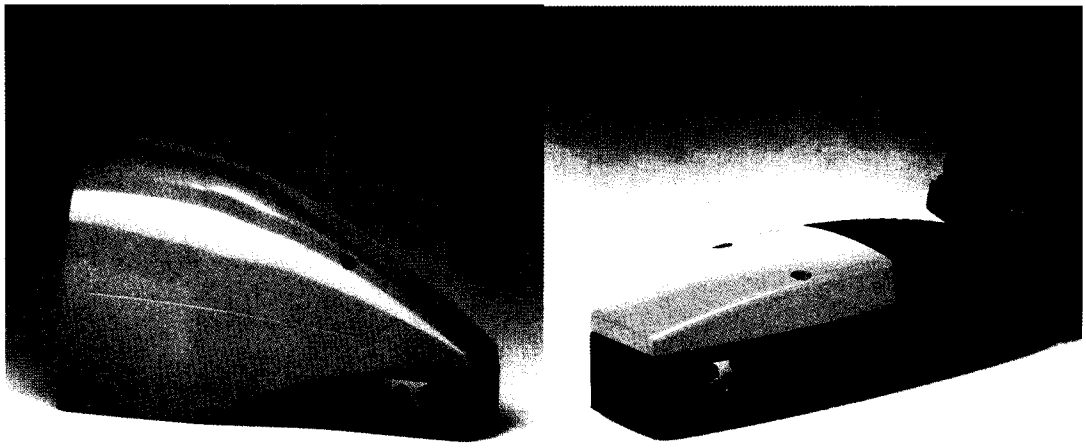

Benefits

- The Mistral heavy industrial foot air valve offers high performance and style.
- Available in a choice of colour combinations and valve options.
- Special colours available for volume OEM customers.
- Robust construction from die-cast aluminium.
- Weight: 800g (unguarded), 1500g (guarded).
- The guard is large enough to allow the operator to wear industrial protective shoes.
- Choice of valve port threads.
- Competitively priced for the OEM market.
- Mechanical performance 10^6+

6255 - [ ] [A] [A] [A] - [ ] [A] [Z] [0]

Cover/Guard Option

A	Cover - Yellow
B	Guard - Yellow
C	Cover - White
D	Guard - White
E	Cover - Blue
F	Guard - Blue
G	Cover - Orange
H	Guard - Orange

Base Colour

A	Black

Tread Colour

A	Black

Valve Action

A	Momentary 5/2 Valve 1/8 BSP ISO R228 Std
B	Momentary 5/2 Valve 1/8" NPT
C	Momentary 3/2 Valve 1/8 BSP ISO R228 Std
D	Momentary 3/2 Valve 1/8" NPT

Pneumatic Rating

A	Maximum Operating Pressure 10 Bar Temperature -20°C To +80°C Flow Rate At 6 Bar 19dm³/Sec (40 SCFM)

As a consequence of our policy of continual improvement, we reserve the right to change without notice any detail in this publication. Please see our conditions of Sale.

The Mistral

Industrial Foot Air Valve

Guard Option

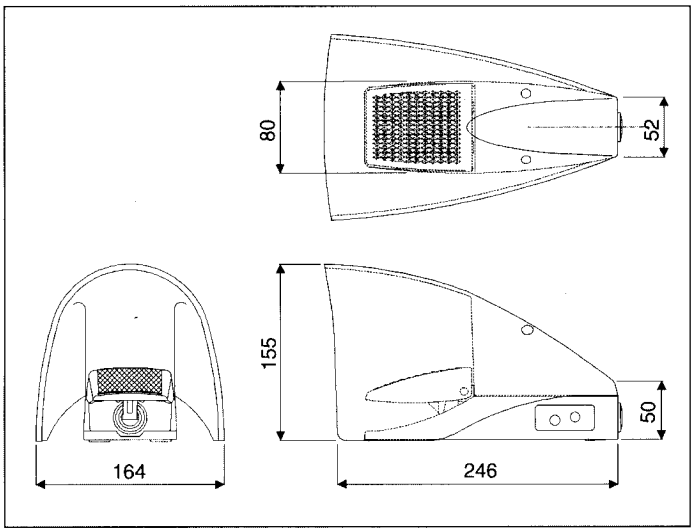

Cover Option

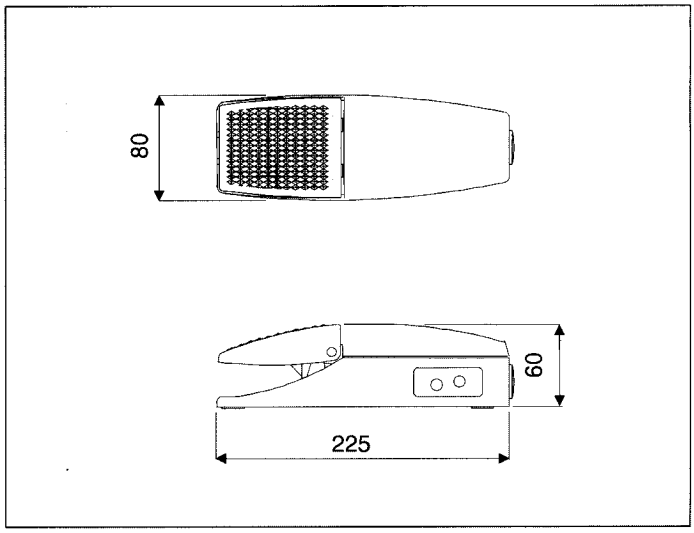

Technical Data	
Maximum Operating Pressure	10 bar (145 psi / 1000kPa)
Temperature Range	-20°C To +80°C (-40°F To +176°F)
Air Condition	Filtered To 40 Microns Lubricated Or Dry
Flow Rate at 6 Bar (87 psi / 600kPa)	19dm³/sec (40 SCFM)
Ports	ISO R228 Standard or NPT

Connection Information

Valve connected as a 3/2 Normally Closed valve

- The air supply should be connected to Port 1.
- Port 2 is redundant and should be plugged with the plug fitting supplied.
- The outlet is connected to Port 4.
- Ports 3 and 5 are exhaust ports and should be left open to atmosphere or fitted with silencers. See note below.

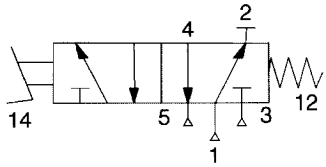

Valve connected as 3/2 Normally Open valve

- The air supply should be connected to Port 1.
- Port 4 is redundant and should be plugged with the plug fitting supplied.
- The outlet is connected to Port 2.
- Ports 3 and 5 are exhaust ports and should be left open to atmosphere or fitted with silencers. See note below.

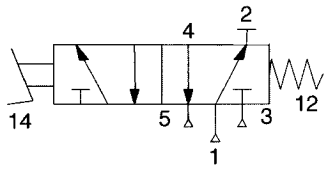

Valve connected as 5/2 valve

- The air supply should be connected to Port 1.
- Ports 2 and 4 are outlet or cylinder ports.
- Ports 3 and 5 are exhaust ports and should be left open to atmosphere or fitted with silencers. See note below.

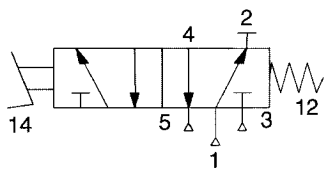

Note: We recommend that the exhaust ports of the valve are fitted with silencers. These will reduce the noise of the exhausting air and prevent dirt entering the valve.

A bag of 6mm fittings is available from Herga (Part No. 6050-5500-0029)

As a consequence of our policy of continual improvement, we reserve the right to change without notice any detail in this publication. Please see our conditions of Sale.