DATASHEET - DILM95-XSPR500



Similar to illustration

RC suppressor circuit, 240 - 500 AC V, For use with: DILM40 - DILM95, DILK33 - DILK50, DILMP63 - DILMP200

Part no.	**DILM95-XSPR500**
Catalog No.	**281207**
Alternate Catalog No.	**XTCEXRSFC**

Delivery program

Product range			Accessories
Accessories			Suppressor circuit
Voltage	U_s	V	240 - 500 AC
For use with			DILM40 - DILM95 DILK33 - DILK50 DILMP63 - DILMP200
Contact sequence			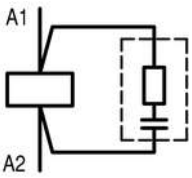
Instructions			For AC operation contactors 50 - 60 Hz. With DC operated contactors and with DILM115 and DILM150 the suppressor is integrated. Note drop-out delay

Design verification as per IEC/EN 61439

Technical data for design verification			
Rated operational current for specified heat dissipation	I_n	A	0
Heat dissipation per pole, current-dependent	P_{vid}	W	0
Equipment heat dissipation, current-dependent	P_{vid}	W	0
Static heat dissipation, non-current-dependent	P_{vs}	W	0
Heat dissipation capacity	P_{diss}	W	0
Operating ambient temperature min.		°C	-25
Operating ambient temperature max.		°C	60
IEC/EN 61439 design verification			
10.2 Strength of materials and parts			
10.2.2 Corrosion resistance			Meets the product standard's requirements.
10.2.3.1 Verification of thermal stability of enclosures			Meets the product standard's requirements.
10.2.3.2 Verification of resistance of insulating materials to normal heat			Meets the product standard's requirements.
10.2.3.3 Verification of resistance of insulating materials to abnormal heat and fire due to internal electric effects			Meets the product standard's requirements.
10.2.4 Resistance to ultra-violet (UV) radiation			Meets the product standard's requirements.
10.2.5 Lifting			Does not apply, since the entire switchgear needs to be evaluated.
10.2.6 Mechanical impact			Does not apply, since the entire switchgear needs to be evaluated.
10.2.7 Inscriptions			Meets the product standard's requirements.
10.3 Degree of protection of ASSEMBLIES			Does not apply, since the entire switchgear needs to be evaluated.
10.4 Clearances and creepage distances			Meets the product standard's requirements.
10.5 Protection against electric shock			Does not apply, since the entire switchgear needs to be evaluated.
10.6 Incorporation of switching devices and components			Does not apply, since the entire switchgear needs to be evaluated.
10.7 Internal electrical circuits and connections			Is the panel builder's responsibility.
10.8 Connections for external conductors			Is the panel builder's responsibility.
10.9 Insulation properties			
10.9.2 Power-frequency electric strength			Is the panel builder's responsibility.
10.9.3 Impulse withstand voltage			Is the panel builder's responsibility.
10.9.4 Testing of enclosures made of insulating material			Is the panel builder's responsibility.

10.10 Temperature rise			The panel builder is responsible for the temperature rise calculation. Eaton will provide heat dissipation data for the devices.
10.11 Short-circuit rating			Is the panel builder's responsibility. The specifications for the switchgear must be observed.
10.12 Electromagnetic compatibility			Is the panel builder's responsibility. The specifications for the switchgear must be observed.
10.13 Mechanical function			The device meets the requirements, provided the information in the instruction leaflet (IL) is observed.

Technical data ETIM 7.0

Low-voltage industrial components (EG000017) / Surge protection module (EC000683)			
Electric engineering, automation, process control engineering / Low-voltage switch technology / Contactor (LV) / Component for protective circuit (ecl@ss10.0.1-27-37-10-10 [AKF019013])			
Function			Varistor (voltage-sensitive resistor)
Rated control supply voltage Us at AC 50HZ		V	240 - 500
Rated control supply voltage Us at AC 60HZ		V	240 - 500
Rated control supply voltage Us at DC		V	0 - 0
Voltage type for actuating			AC
With LED indication			No

Approvals

Product Standards			IEC/EN 60947-4-1; UL 508; CSA-C22.2 No. 14-05; CE marking
UL File No.			E29184
UL Category Control No.			NKCR2, NKCR8
CSA File No.			256465
CSA Class No.			3211-07
North America Certification			UL recognized, CSA certified
Specially designed for North America			No

Dimensions

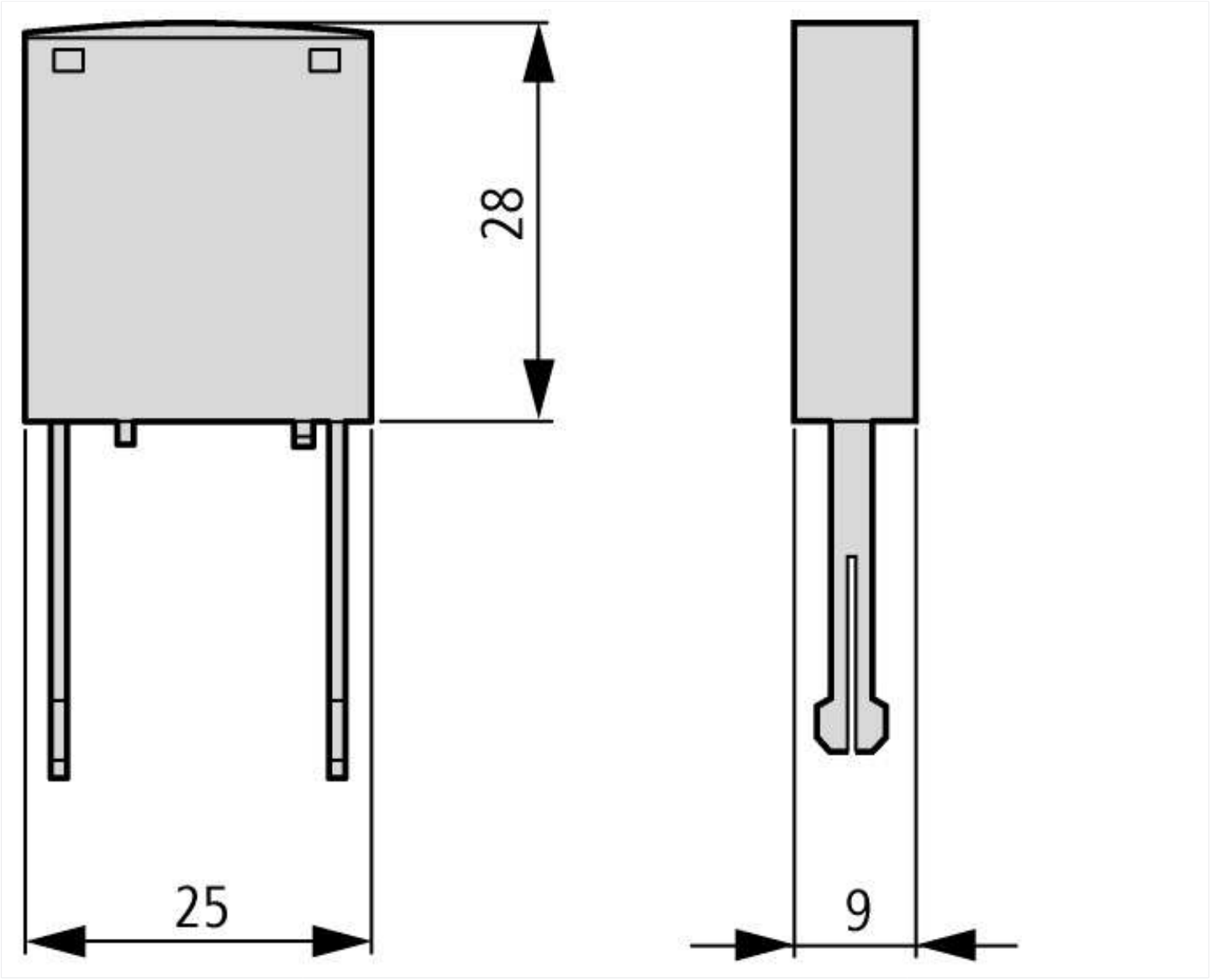

© 12/2020 by Eaton Industries GmbH