E11801

Mounting adapter for tie-rod/integrated profile cylinders

ADAPT TIE ROD/PROFILE CYL

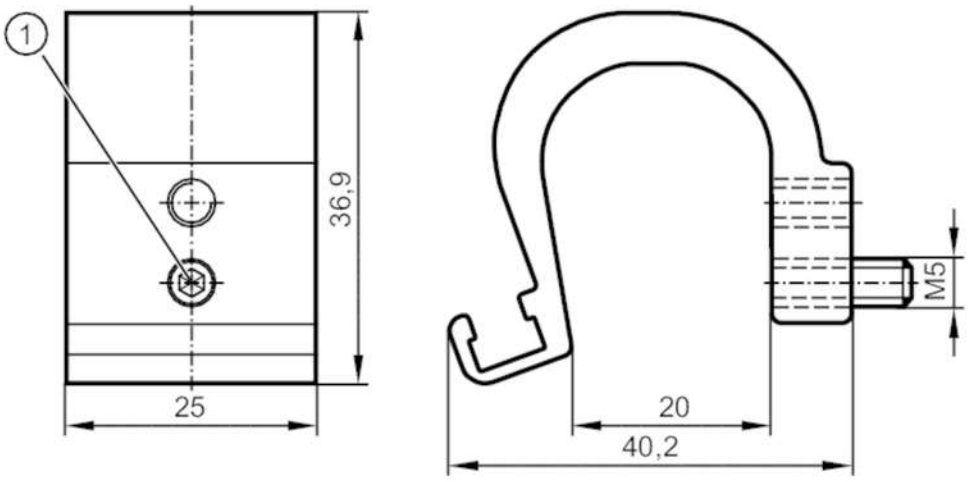

Application		
Design		for types MKT
Mechanical data		
Weight	[g]	31.4
Materials		Adapter: aluminium; screw: stainless steel
Clamping range	[mm]	14...20
Remarks		
Pack quantity		1 pcs.