PA3029

Pressure transmitter with ceramic measuring cell

PA-0-1-RBR14-A-ZVG/US/ /V

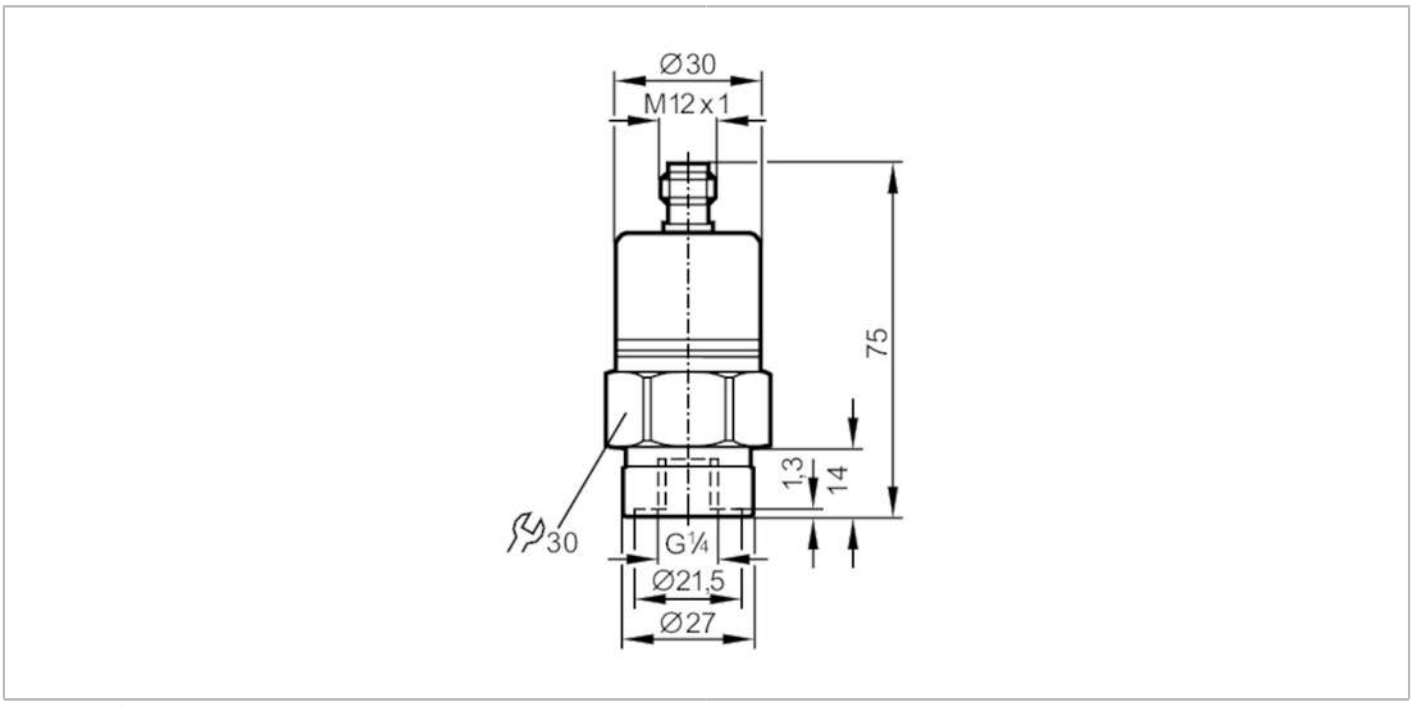

Product characteristics				
Number of inputs and outputs	Number of analogue outputs: 1			
Measuring range	-1...0 bar	-1000...0 mbar	-14.5...0 psi	-100...0 kPa
Process connection	threaded connection G 1/4 internal thread			
Application				
Special feature	Gold-plated contacts			
Application	for industrial applications			
Media	liquids and gases			
Medium temperature [°C]	-25...90; (on request: -40...90 °C)			
Min. bursting pressure	30 bar	435 psi	3 MPa	
Pressure rating	10 bar	145 psi	1 MPa	
Type of pressure	relative pressure; vacuum			
Electrical data				
Operating voltage [V]	9.6...32 DC			
Min. insulation resistance [MΩ]	100; (500 V DC)			
Protection class	III			
Reverse polarity protection	yes			
Inputs / outputs				
Number of inputs and outputs	Number of analogue outputs: 1			
Outputs				
Total number of outputs	1			
Output signal	analogue signal			
Number of analogue outputs	1			
Analogue current output [mA]	4...20			

PA3029

Pressure transmitter with ceramic measuring cell

PA-0-1-RBR14-A-ZVG/US/ /V

Max. load [Ω]	720; (Ub = 24 V; (Ub - 9,6 V) / 20 mA)			
Overload protection	yes			
Measuring/setting range				
Measuring range	-1...0 bar	-1000...0 mbar	-14.5...0 psi	-100...0 kPa
Accuracy / deviations				
Repeatability [% of the span]	< 0,1; (with temperature fluctuations < 10 K)			
Characteristics deviation [% of the span]	< ± 0,25 (BFSL) / < ± 0,5 (LS); (BFSL = Best Fit Straight Line; LS = limit value setting)			
Long-term stability [% of the span]	< ± 0,05; (per 6 months)			
Temperature coefficient zero point [% of the span / 10 K]	0,1; (0...80 °C)			
Temperature coefficient span [% of the span / 10 K]	0,2; (0...80 °C)			
Response times				
Step response time analogue output [ms]	3			
Operating conditions				
Ambient temperature [°C]	-25...80			
Storage temperature [°C]	-40...100			
Protection	IP 65			
Tests / approvals				
EMC	EN 61000-4-2 ESD	4 kV CD / 8 kV AD		
	EN 61000-4-3 HF radiated	30 V/m		
	EN 61000-4-4 Burst	2 kV		
	EN 61000-4-6 HF conducted	10 V		
	radiation of interference	according to the automotive directive 2004/104/EC		
	CISPR 25			
	immunity	according to the automotive directive 2004/104/EC		
	ISO 11452-2 HF radiated	100 V/m		
	ISO 7637-2 pulse	severity level 4		
Shock resistance	DIN EN 60068-2-27	50 g (11 ms)		
	DIN EN 61373	category 3		
Vibration resistance	DIN EN 60068-2-6	20 g (10...2000 Hz)		
	DIN EN 61373	category 2		
MTTF [years]	506			
Pressure Equipment Directive	Sound engineering practice; can be used for group 2 fluids; group 1 fluids on request			
Railway applications	DIN EN 50155 / IEC 60571	Klasse T3, C1, S1		
Mechanical data				
Weight [g]	222.5			
Housing	cylindrical			
Dimensions [mm]	Ø 30 / L = 75			
Materials	stainless steel (316L/1.4404); FKM; PA; EPDM/X			
Materials (wetted parts)	stainless steel (303/1.4305); ceramics; FKM			

PA3029

Pressure transmitter with ceramic measuring cell

PA-0-1-RBR14-A-ZVG/US/ /V

Min. pressure cycles	100 million
Process connection	threaded connection G 1/4 internal thread
Restrictor element integrated	no (can be retrofitted)

Remarks

Pack quantity	1 pcs.

Electrical connection

Connector: 1 x M12; coding: A; Contacts: gold-plated



Connection

