MURR ELEKTRONIK
stay connected

M12 MALE D CODED 90° SELF-WIREABLE SCREW-TERM.

Shielded 6..8 mm

Link to Product

Illustration



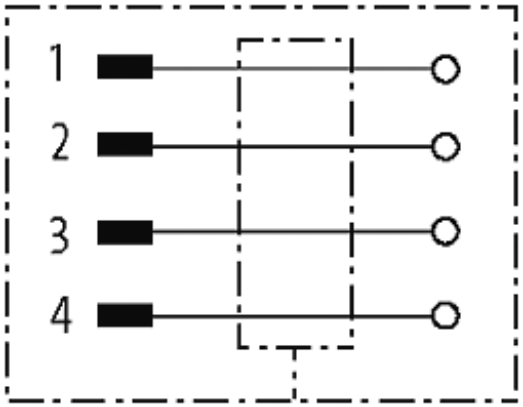

Male



The information in this brochure has been compiled with the utmost care.
Liability for the correctness completeness and topicality of the information is restricted to gross negligence. Version: 08/17

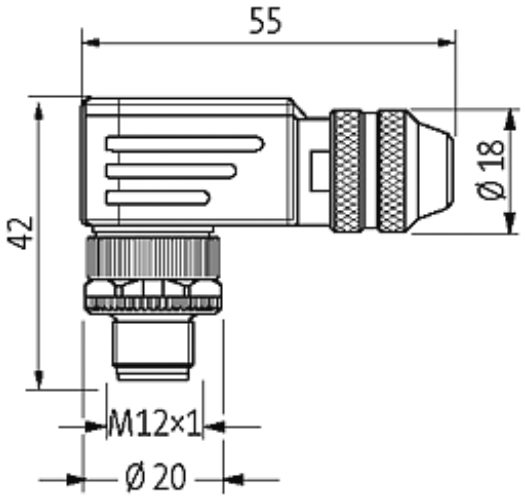

Product may differ from Image

More Info

Form

Form	14581

Technical Data

Operating voltage	max. 250 V AC/DC
Operating current per contact	max. 4 A
Transfer parameters	CAT5, class D (ISO/IEC 11801:2002), (EN 50173-1)
Transfer rate	to 100 Mbit/s Full Duplex
Connection cross section	max. 0.75 mm²
Coding	M12, D-coded
Sealing range (cable Ø)	6...8 mm
Protection	IP67 inserted and tightened (EN 60529)
Locking material	Zinc die casting, matte nickel plated

General data

Temperature range	-40...+85 °C

Commercial data

country of origin	DE
customs tariff number	85369010
EAN	4048879282895
eClass	27143423
minimum order quantity	1

The information in this brochure has been compiled with the utmost care.
Liability for the correctness completeness and topicality of the information is restricted to gross negligence. Version: 08/17