Technical data sheet
Mounting bracket set
Part no.: 560340
BT-SET-240BC



For Illustration purposes only

Contents

- Technical data
- Dimensioned drawings

Technical data

Basic data

Suitable for product group	Protective sensors
Suitable for	MLD 500, MLD 300 multiple light beam safety devices

Mechanical data

Type of fastening, at system	Through-hole mounting
Type of fastening, at device	Clampable
Type of mounting device	Turning, 240°
Mounting device material	Metal
Shock absorber	No

Classification

Customs tariff number	73269098
ECLASS 5.1.4	27279202
ECLASS 8.0	27279202
ECLASS 9.0	27273701
ECLASS 10.0	27273701
ECLASS 11.0	27273701
ECLASS 12.0	27273701
ECLASS 13.0	27273701
ECLASS 14.0	27273701
ECLASS 15.0	27273701
ETIM 5.0	EC002498
ETIM 6.0	EC003015
ETIM 7.0	EC003015
ETIM 8.0	EC003015
ETIM 9.0	EC003015
ETIM 10.0	EC003015

Dimensioned drawings

All dimensions in millimeters

BT-SET-240B swivel mount

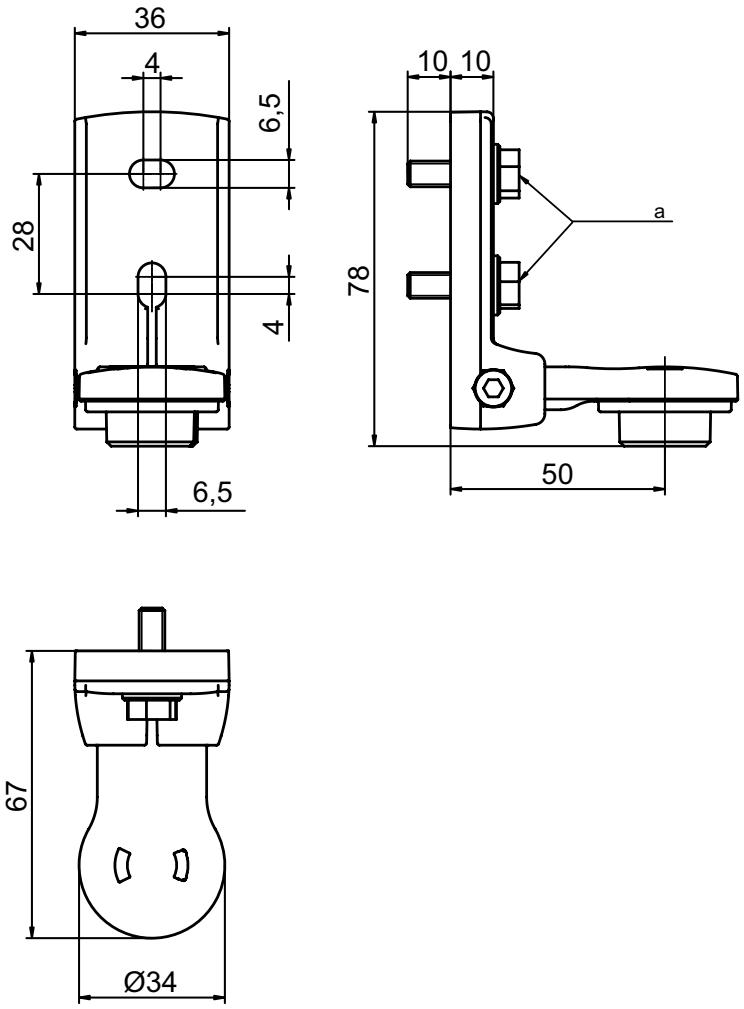

a M6 screw

Dimensioned drawings

BT-SET-240C swivel mount

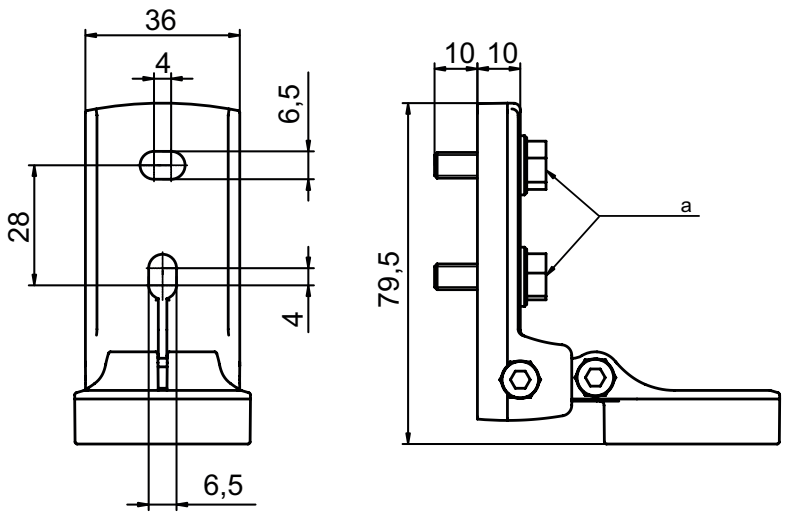

a M6 screw

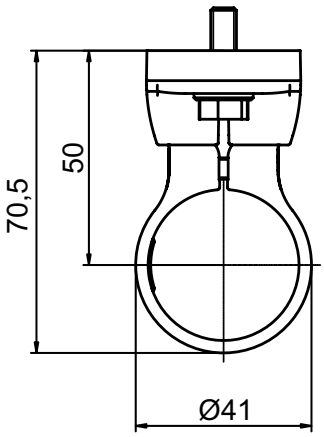

Dimensioned drawings

Mounting dimensions

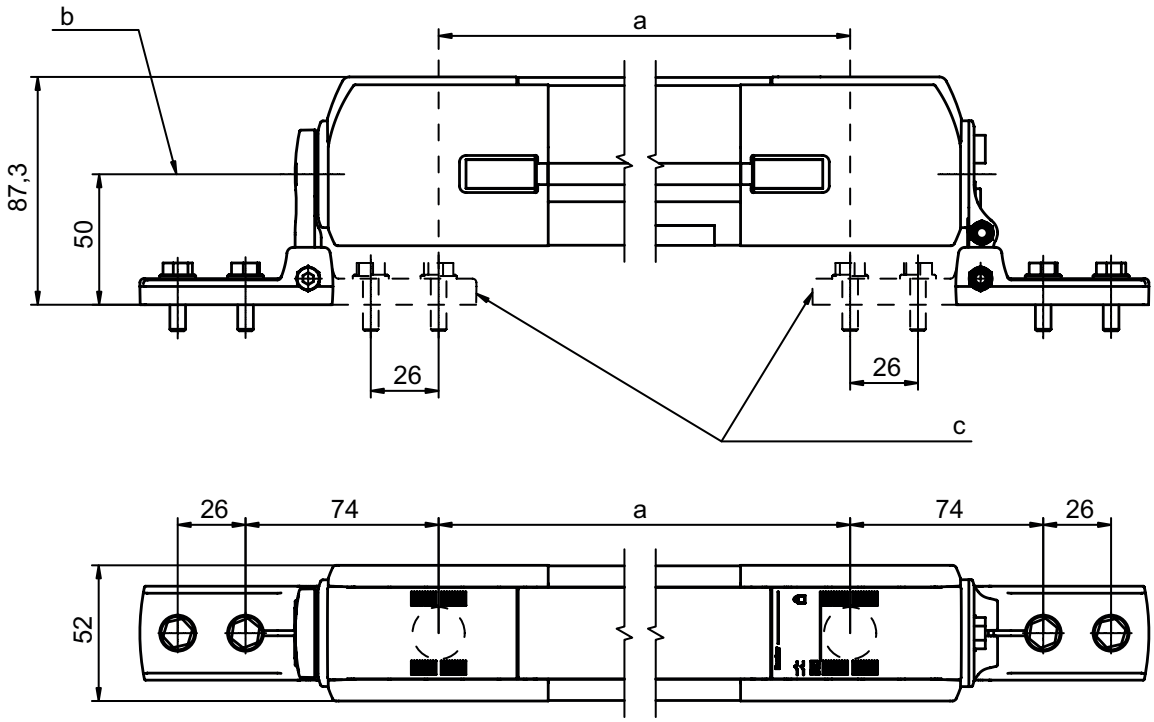

a Beam spacing
b Swivel axis
c Alternative mounting variant

Mounting variants

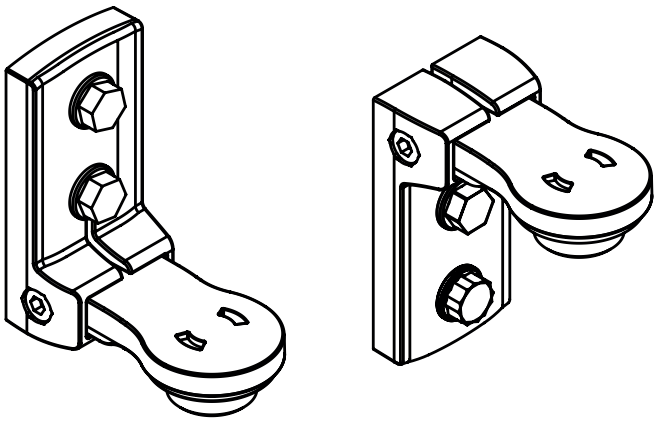

Dimensioned drawings

Mounting variants

