KonnektIT 204 CL / Single PC



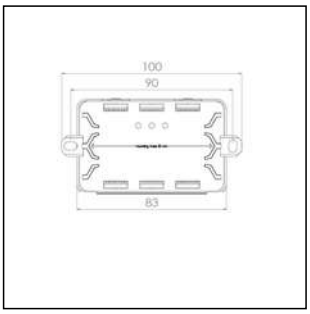

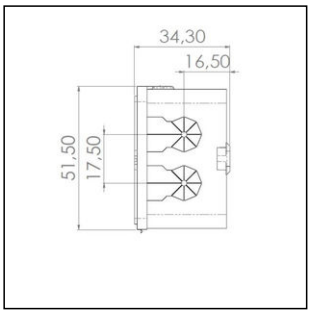

Products may differ in size, colour and appearance to those shown. If you require further information or customisation, please contact us directly.

Material	Polypropylene
Protection class	IP20
Temp. range min	-30 °C
Temp. range max	60 °C
Temperatures during install.	-5 °C - 60 °C
Glow wire test	750 °C
Voltage	400 V
Rated cross section	1,5 mm²
Fixing	2 external mounting feet
External dimensions LxWxH	100 x 51,5 x 34 mm
Product Color	transparent
WISKA-Order no.	10112454
Type	KonnektIT 204 CL / Single PC
Packing unit	1
Tariff number	39269097
ETIM-Classification	EC002600

16.12.2024

Your Contact:
WISKA UK Ltd.
Unit 7, Hurling Way · St. Columb Major Business Park · TR9 6SX, St. Columb Major, Cornwall · Great Britain
☎ +44-12-08816062 · 🖷 +44-12-08816708
info@wiska.co.uk · www.wiska.co.uk

Other technical data on request / subject to change without notice

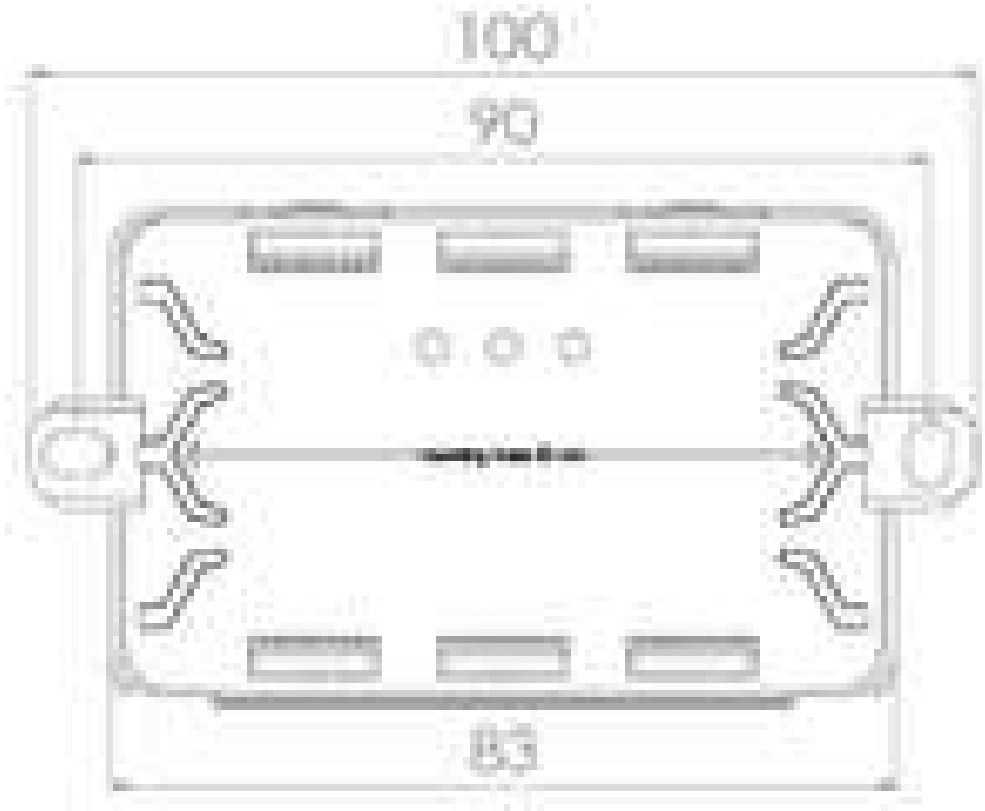

Your Contact:
WISKA UK Ltd.
Unit 7, Hurling Way · St. Columb Major Business Park · TR9 6SX, St. Columb Major, Cornwall · Great Britain
☎ +44-12-08816062 · 🖷 +44-12-08816708
info@wiska.co.uk · www.wiska.co.uk

Other technical data on request / subject to change without notice

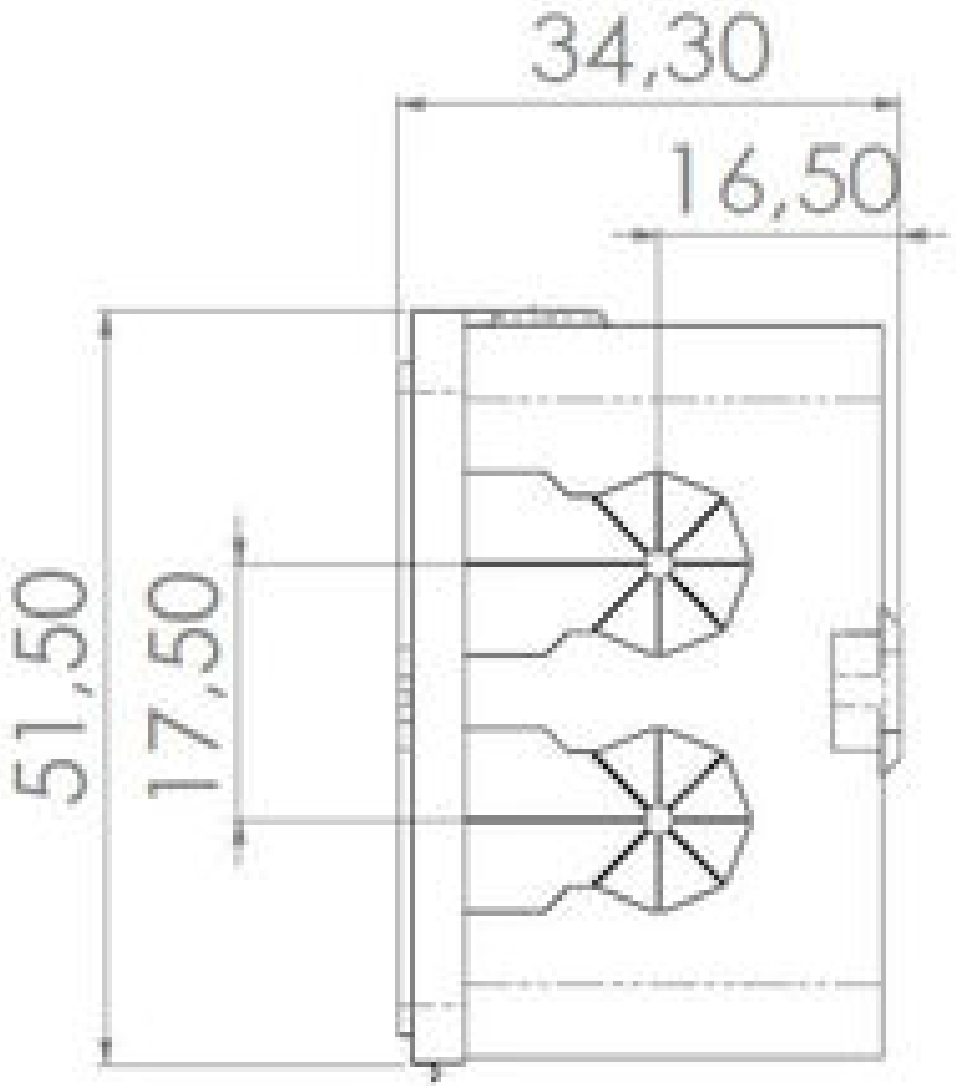

Your Contact:
WISKA UK Ltd.
Unit 7, Hurling Way · St. Columb Major Business Park · TR9 6SX, St. Columb Major, Cornwall · Great Britain
☎ +44-12-08816062 · 🖷 +44-12-08816708
info@wiska.co.uk · www.wiska.co.uk

Other technical data on request / subject to change without notice