Mini Horns Sirens Buzzer / Horn 584

Signal horn WM Contin. tone 115VAC GY



Part No.: 584.000.67

MECHANICAL DATA	
Length	91 mm
Width	83 mm
Height	198 mm
Diameter	83 mm
Materials	PC PC/ABS
Housing colour	Grey
Protection category	IP65
Connection	Screw terminals
cross-sectional area maximum	1,50mm² / 16AWG
Cable entry	Membrane grommet
Cable entry minimum	d = 1 mm
Cable entry maximum	d = 9 mm
Tension relief	Pull-out protection
Type of fixing	Wall mounting
Working temperature minimum	-20°C
Working temperature maximum	+50°C
Weight with packaging	203 g
Product weight	153 g

ELECTRICAL DATA	
Operating voltage	115V
Operating voltage type	AC
Operating voltage frequency	60Hz
Operating voltage tolerance	+/- 10%
Rated operational voltage	115 VAC
Rated operational current	70 mA
Rated inrush current	1.000 mA
Protection class	Protection class 2
Pollution degree	3
Overvoltage category	II
Isolation voltage	Ui = 250V; Uimp = 2.500V

ACUSTICAL DATA	
Volume (max) at 1m distance	98,0 dB (A)
Acoustic signal image	Continuous tone
Audio frequency	110 Hz
Acoustic service life	5,000 h minimum

! For additional installation and mounting information, refer to the appropriate user guide at www.werma.com. This printed copy is for information only and is subject to alteration.

Mini Horns Sirens Buzzer / Horn 584

Signal horn WM Contin. tone 115VAC GY

APPROVAL DATA	
Conforms with CE	Yes
WEEE	Yes
Conforms with ATEX-directive	No
Conforms with CCC	No
Conforms with UL	No
Conforms with FCC	No
Conforms with IC	No
EAC certificate available	Yes
Conforms with AS-I	No
ICAO Certification	No
Conforms with DNV	No
Conforms with RoHS CN	No
Conforms with VdS	No

DRAWING

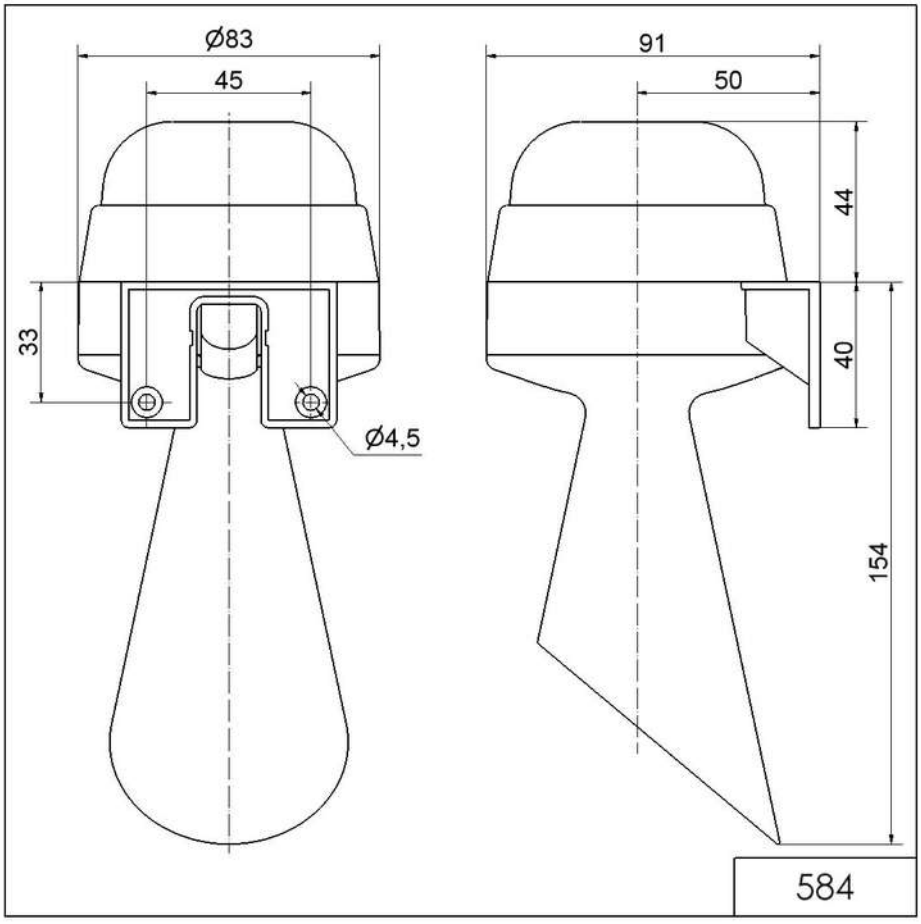

! For additional installation and mounting information, refer to the appropriate user guide at www.werma.com. This printed copy is for information only and is subject to alteration.