PT9554

Pressure transmitter

PT-010-RBG14-B-DVG/US/ /W

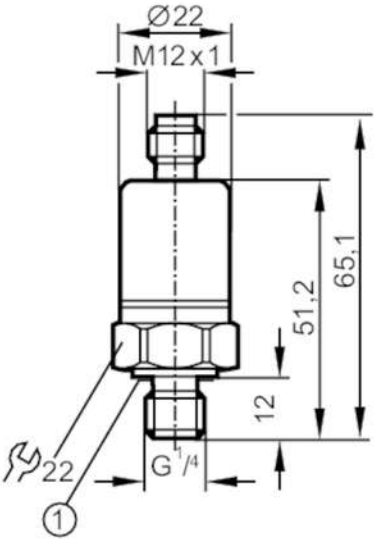

1 Sealing
Tightening torque 25 Nm

Product characteristics				
Number of inputs and outputs		Number of analogue outputs: 1		
Measuring range		0...10 bar	0...145 psi	0...1000 kPa	0...1 MPa
Process connection		threaded connection G 1/4 external thread		
Application				
Application		for mobile applications		
Media		liquids and gases		
Medium temperature	[°C]	-25...90; (on request: -40...100 °C)		
Min. bursting pressure		300 bar	4350 psi	30 MPa
Pressure rating		25 bar	362 psi	2.5 MPa
Type of pressure		relative pressure		
Electrical data				
Operating voltage	[V]	16...36 DC		
Current consumption	[mA]	< 6		
Min. insulation resistance	[MΩ]	100; (80 V DC)		
Protection class		III		
Reverse polarity protection		yes		
Inputs / outputs				
Number of inputs and outputs		Number of analogue outputs: 1		
Outputs				
Total number of outputs		1		
Output signal		analogue signal		
Number of analogue outputs		1		
Analogue voltage output	[V]	0...10		
Min. load resistance	[Ω]	2000		

PT9554

Pressure transmitter

PT-010-RBG14-B-DVG/US/ /W

Measuring/setting range				
Measuring range	0...10 bar	0...145 psi	0...1000 kPa	0...1 MPa
Accuracy / deviations				
Repeatability [% of the span]	< ± 0,1; (with temperature fluctuations < 10 K)			
Characteristics deviation [% of the span]	< ± 1,0; (incl. drift when overtightened, zero point and span error)			
Linearity deviation [% of the span]	< ± 0,25 (BFSL) / < ± 0,5 (LS)			
Hysteresis deviation [% of the span]	< ± 0,2			
Long-term stability [% of the span]	< ± 0,1; (per 6 months)			
Temperature coefficient zero point [% of the span / 10 K]	< ± 0,1; (-25...90 °C)			
Temperature coefficient span [% of the span / 10 K]	< ± 0,1; (-25...90 °C)			
Response times				
Step response time analogue output [ms]	8			
Operating conditions				
Ambient temperature [°C]	-25...90			
Storage temperature [°C]	-40...100			
Protection	IP 67; IP 69K			
Tests / approvals				
EMC	EN 61000-4-2 ESD		4 kV CD / 8 kV AD	
	immunity		according to the automotive directive 1995/54/EC, 2004/104 EC, 2005/83/EC	
	ISO 11452-2		100 V/m	
	ISO 11452-4		100 mA / severity level 4	
	ISO 7637-2		severity level 4	
	radiation of interference		CISPR 25	
	EN 61000-6-1			
	EN 61000-6-4			
Shock resistance	DIN IEC 68-2-27		50 g (11 ms)	
Vibration resistance	DIN IEC 68-2-6		20 g (10...2000 Hz)	
MTTF [years]	1069			
Pressure Equipment Directive	Sound engineering practice; can be used for group 2 fluids; group 1 fluids on request			
Mechanical data				
Weight [g]	85.5			
Housing	cylindrical			
Dimensions [mm]	Ø 22 / L = 65.1			
Materials	stainless steel (316L/1.4404); PA			
Materials (wetted parts)	stainless steel (316L/1.4404); FKM			
Min. pressure cycles	50 million			
Process connection	threaded connection G 1/4 external thread			

PT9554

Pressure transmitter

PT-010-RBG14-B-DVG/US/ /W

Restrictor element integrated	yes

Remarks

Remarks	BFSL = Best Fit Straight Line
	LS = limit value setting
Pack quantity	1 pcs.

Electrical connection

Connector: 1 x M12; coding: A



Connection

