FB02A1PL

Fuse holder UL recognized and CSA certified, for 14X51mm fuses. 50A rated current at 690VAC, 1P. With status indicator. 1 module



Product designation			FB
Product type designation			Fuse holder
Number of DIN modules			1.5
Operating voltage type			AC
Electrical features			
IEC maximum rated current (In)		A	50
IEC maximum rated voltage (Un)		V	690
IEC Utilization category			AC22B 500V - AC21B 690V
Derating factor of rated current In for different ambient temperature			
	20°C		1
	30°C		0.95
	40°C		0.9
	50°C		0.8
	60°C		0.7
	70°C		0.5
Derating factor of rated current In for side by side fuse holders (poles)			
	1-4		1
	5-6		0.8
	7-9		0.7
	≥10		0.6
Rated current (In)		A	50
Ambient conditions			
Operating temperature			
	min	°C	-20
	max	°C	70
Storage temperature			
	min	°C	-40
	max	°C	80
Max altitude		m	3000
Mechanical features			
Operating position			
	normal		Vertical plan
	allowable		Any
Fixing			35mm DIN rail
Tightening torque for terminals			
	max	Nm	3
	max	lbin	2.2
Conductor section			
	Flexible max (IEC)	mm²	25
	- Flexible max (AWG/kcmil)		6
	Rigid max (IEC)	mm²	35
	- Rigid max (AWG/kcmil)		8
Weight		g	114
Resistance & Protection			

The characteristics described in this document are subject to updates or modifications at any time. The descriptions, technical and functional information, illustrations and instructions in this brochure are purely illustrative, and are consequently not contractually binding

FB02A1PL

Fuse holder UL recognized and CSA certified, for 14X51mm fuses. 50A rated current at 690VAC, 1P. With status indicator. 1 module

Frontal IP degree	IP20

Dimensions

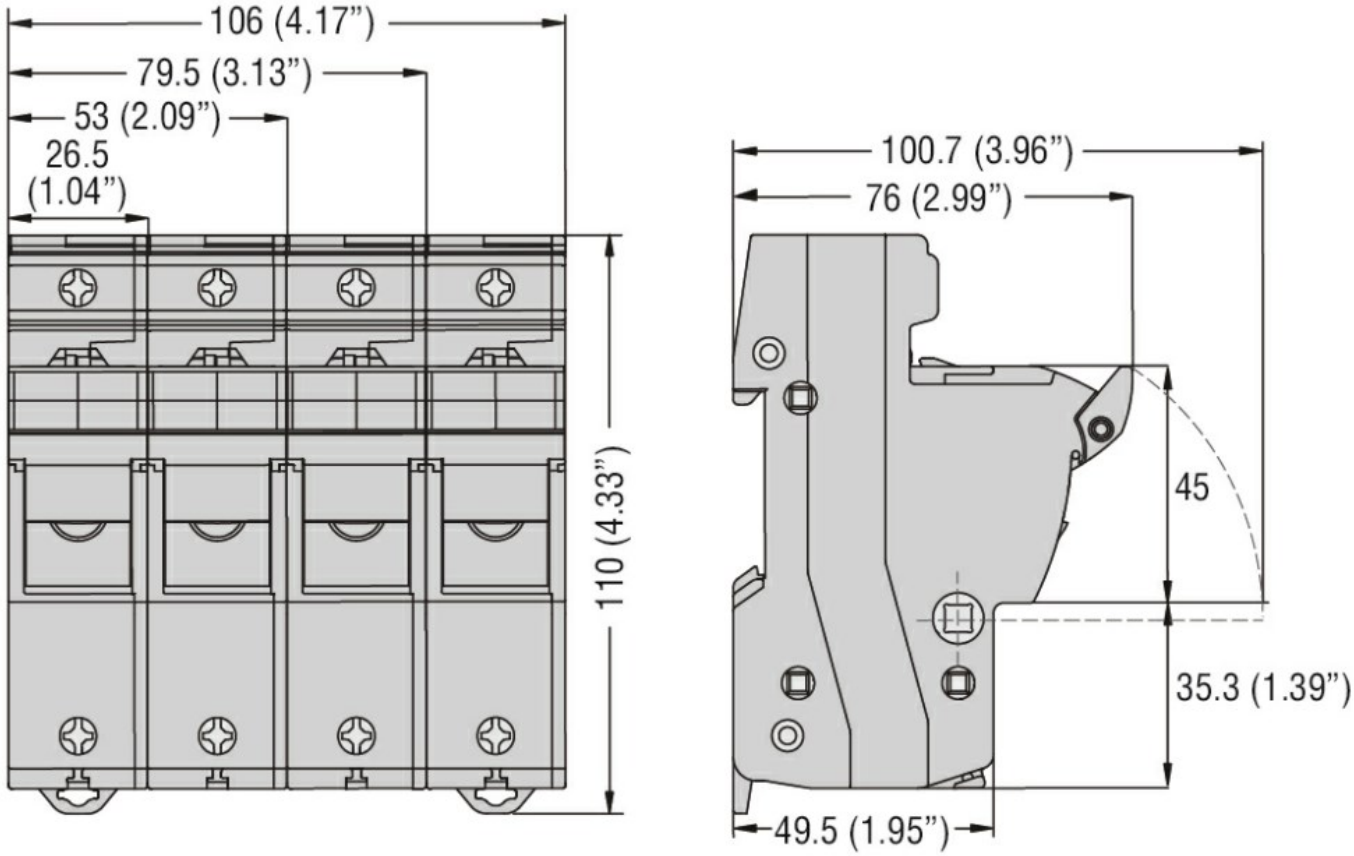

Wiring diagrams



1P

Certifications and compliance

Compliance

CSA C22.2 n°4248.1
IEC/EN 60269-1
IEC/EN 60269-2
IEC/EN 60947-1
IEC/EN 60947-3
UL 4248-1

Certifications

cURus
EAC

ETIM classification

ETIM 8.0	EC002705 - Holder for cylindrical fuse

The characteristics described in this document are subject to updates or modifications at any time. The descriptions, technical and functional information, illustrations and instructions in this brochure are purely illustrative, and are consequently not contractually binding