efector300

SL0301

SLG23CEEAKOA/PH

Flow sensors

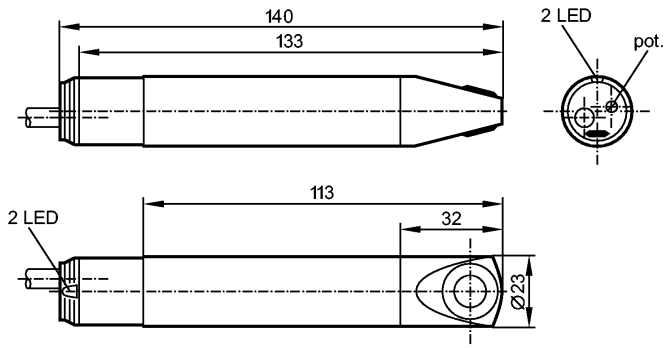

Made in Germany

Product characteristics		
Airflow monitor		
Cylindrical type		
Process connection: Ø 23 mm		
Application		
Medium temperature Gases	[°C]	-10...50
Electrical data		
Electrical design		AC/DC
Operating voltage	[V]	80...250 AC (47...63 Hz AC) / 90...250 DC
Power consumption	[VA]	3
Reverse polarity protection		no
Outputs		
Output function		relay energised when flow is present
Contact rating		3 A (30 V DC / 250 V AC)
Short-circuit proof		no
Overload protection		no
Measuring / setting range		
Setting range	[cm/s]	100...1000
Greatest sensitivity	[cm/s]	100...400
Accuracy / deviations		
Max. temperature gradient of medium	[K/min]	5
Reaction times		
Power-on delay time	[s]	60
Response time	[s]	3...60
Software / programming		
Adjustment of the switch point		potentiometer
Environment		
Pressure rating	[bar]	1
Ambient temperature	[°C]	-10...50
Max. relative air humidity	[%]	90
Protection		IP 65
Tests / approvals		
MTTF	[Years]	741

efector300

SL0301

SLG23CEEAKOA/PH

Flow sensors

Mechanical data		
Process connection		Ø 23 mm
Materials (wetted parts)		PBT; titanium
Housing materials		housing: PBT; sensor surface: titanium
Weight	[kg]	0.256
Displays / operating elements		
Function display	LED	1 x red / 1 x green
Electrical connection		
Connection		PUR cable / 2 m; 4 x 0.5 mm²

Wiring

Core colours

BN brown
BU blue
BK black
WH white

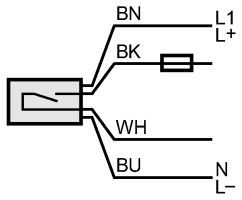

Note: miniature fuse to IEC60127-2 sheet 1,
≤ 5 A (fast acting)

Accessories		
Accessories (included)		Mounting clamp (E40048); screwdriver
Remarks		
Remarks		Recommendation: check the unit for reliable function after a short circuit.
Pack quantity	[piece]	1