

UNIFLEX SG 45

Transmitter for load cells, strain gauges, and melt pressure sensors

Energization: 10 VDC
up to 125 mA sensor current
Tare & zero adjustment
Lead resistance compensation (4 or 6-wire connection)
High resolution
Fast cycle times
Customer-specific linearization
80% switch for melt pressure calibration
Communication port / field bus interface
cULus certified

rail line

FEATURES

- Compact design, only 22.5 mm (0.87") wide
- Clips onto top-hat DIN rail
- Plug-in screw terminals or spring-clamp connectors - simple connection
- Dual-line LC display with additional display elements
- process values always in view
- Convenient 3-key operation
- Direct communication between mounted controllers, fieldbus connections via bus coupler
- Measurement input with high signal resolution (23 bits)
- Universal high-resolution output (14 Bit) as combined voltage/current output
- Two relay outputs
- Quick response; only 50 ms cycle time, i.e. also suitable for fast signals
- Customer-specific linearization
- Dead load compensation and tare adjustment
- Min/max indicator ('slave pointer')
- Preset for output value
- Zero setting with adjustable limit value

APPLICATIONS

Measurement, scaling, and isolation of electrical signals, e.g. for weighing applications in the following fields:

- Chemical industry
- Foodstuffs & beverage industries
- Concrete
- Asphalt
- Building industry
- Lime and clay
- ....
- Industrial weighers such as:
  - Container scales
  - Floor scales / platform scales
  - Road vehicle weighbridges
  - Rail vehicle weighbridges
  - Crane weighers
  - Transshipment cranes
- Extrusion applications
  - Melt pressure monitoring
  - Melt pressure control
  - Melt filter control
  - Pressure and speed control

GENERAL

The Uniflex SG 45 is a transmitter for processing and monitoring input signals form strain gauges, load cells, melt pressure sensors, and resistance bridges.

It can be used in practically all industrial applications involving the precise measurement, indication, and processing of force, weight, or melt pressure.

Moreover, it permits operation and parameter adjustment via keys in the front panel.

Alternatively, the Uniflex SG 45 can be operated, parametrized, and calibrated by means of a PC and a connection adapter.

This also permits the adjusted parameters and configuration to be documented during operation.

The simple zero setting function ensures high operating convenience.

DESCRIPTION

The input of the SG 45 has a high resolution for mV signals as well as a supply voltage for energizing strain gauges and sensors fitted with resistance bridges (e.g. load cells and pressure sensors).
Up to four load cells with 350 Ω each can be connected and processed.

Hereby, the scaling function converts the mV signals directly into the measures value.

The input-signals can be linearized or adapted according to a table with up to 31 segments.

Moreover, the SG 45 permits the direct connection of a melt pressure sensor. For this operating mode, the SG 45 also provides a contact for switching the sensor's 80% calibration resistor.

The universal output for standard signals and two relays are standard features.

Galvanic isolation is provided between inputs and outputs as well as from the supply voltage and the communication interfaces.

Mounting

The compact KS 45 is clipped onto a top-hat DIN rail, and can also be unmounted very simply.
All connections are of the plug-in type, so that a controller can be replaced very quickly without disturbing the wiring.

Display and operation

The dual-line LC display permits simultaneous indication of the measured value and all of the unit's operating functions.

Moreover, a LED and 4 other display elements give a reliable indication of operating status, operating mode, and error messages.

The user-configurable engineering unit of the measured value can be included in the display. By means of the extended Operating Level, it is possible to show any signal or parameter in the 2nd display line.

Interfaces and Engineering Tools

The controller settings are also configurable by means of an Engineering Tool.

Via the BlueControl® software (which includes a transmitter simulation), and especially the convenient connection via the BluePort® front inter- face, the user can solve the task in hand without having to work through operating instructions.

Of course, practically all settings can also be made from the controller front.

Moreover, the SG 45 can exchange data with superordinate systems and PCs via an optional RS 485 interface with Modbus RTU protocol that is fitted into the top-hat DIN rail.

Via this interface, it is possible to transmit the measurement signal as an integer value or float variable.

Devices with option system interface can be connected via bus coupler to fieldbusses (CAN, ProfibusDP, ModbusTCP).

Password protection

If required, unauthorized access to the various Operating Levels can be prevented with a password, or an entire level can be blocked.

TECHNICAL DATA

INPUTS

SIGNAL INPUT INP1

Input values can also be entered via the interface (forcing).

Accuracy:	0,01% with 25°C
Decimal point:	0 to 3 decimals
Input filter:	adjustable 0.0...999.9 s
Scanning cycle:	50 ms with 19bits
Linearization:	31 segments, adaptable with BlueControl®
Measurement value correction:	2-point or offset
Limit frequency:	1.7 Hz
Input circuit monitoring with 6-wire connection	sensor break, polarity, short circuit

Break monitoring

Operating sense configurable

Connecting principle:	4-wire bridge
	6-wire bridge
	(sense lead)

Input signal range

Span start and span:	anywhere within the measurement range
Scaling:	freely selectable, –1999...9999

MEASUREMENT SPAN:

Slope/ sensitivity	with Us = 10V
0.5 mV/V	5 mV
1 mV/V	10 mV
2 mV/V	20 mV
4 mV/V	40 mV

DIGITAL INPUT DI 1

Operation as:
Contact input

Connection of a potential-free contact that is suitable for switching 'dry' circuits.

Switched voltage:	5 V
Current:	0.5 mA

Function

Configurable as direct or inverse switch or push button!
Functions:
Operation disabling, reset of stored alarms and the min/max indicator (slave pointer), enabling the tare function, batching, reset, dead load compensation, and zero setting.

OUTPUTS

SURVEY OF OUTPUTS

Output	Purpose
OUT1, OUT2 (relay)	Limit contacts, alarms, fault, status messages *
OUT3 (continuous)	Analog output for display value, INP1

** All logic signals can be "OR-linked".*
Output values can also be forced via interface.

RELAY OUTPUTS OUT1, OUT2

Contact type:	2 normally open with common contact connection
Max. contact rating:	500 VA, max. 250 V, max. 2A at 48...62 Hz, ohmic load
Min. contact rating:	6V, 1 mA DC
Switching cycles (electrical):	for I=1A/2A: ≥ 800,000/500,000 (at~250V (ohmic load))

Note:

If the relays OUT1, 2 and 3 are used to operate external contactors, these must be fitted with RC snubber circuits to manufacturer specifications to prevent excessive voltage peaks at switch-off.

OUT3 AS UNIVERSAL OUTPUT

Parallel current/voltage output with common 'minus' terminal (combined use only in galvanically isolated circuits).

Freely scalable	
Resolution:	14 bits
Dynamic response (step change of input signal) T_{90}:	Output follows the input within 300 ms
Tracking error I/U:	≤ 2 %
Residual ripple: (rel. to range end)	≤ ±1% 0...130 kHz

Current output

0/4...20 mA, configurable, short-circuit proof.

Control range:	-0.5...23 mA
Load:	≤ 600 Ω
Load effect:	≤ 0.02%
Resolution:	≤ 1.5 µA
Error:	≤ 0.1%

Voltage output

0/2...10V, configurable, not permanently short-circuit proof

Control range:	-0.15...11.5 V
Load:	≥ 2 kΩ
Load effect:	≤ 0.06%
Resolution:	≤ 0.75 mV
Error:	≤ 0.1%
Additional error when using simultaneously the current output	≤ 0.09%

GALVANIC ISOLATION

Fig. 1: Galvanic isolation

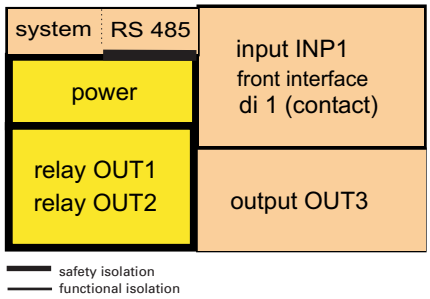

Galvanic isolation is provided between inputs and outputs as well as from the supply voltage (3-port-isolation).

Test voltage:

Between power supply and in-/outputs:	2.3 kV AC, 1 min
Between input and output:	500 V AC; 1min

Fig.2: Electrical connections SG 45

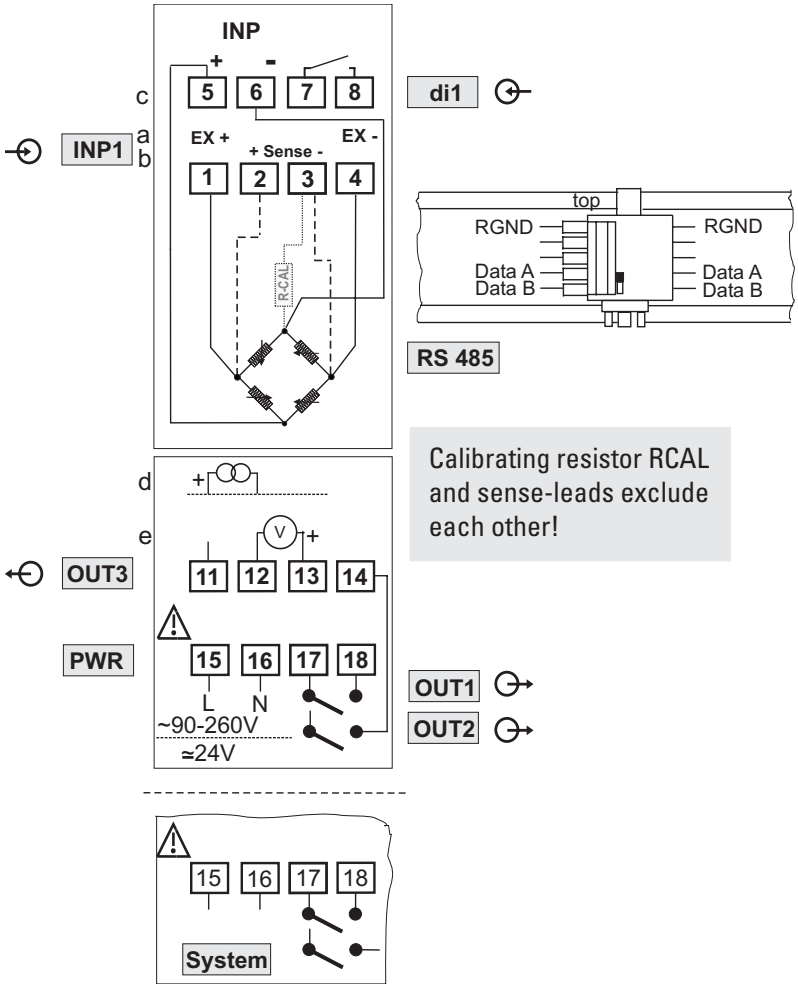

Isolation:

between in-/output against earth:	≤ 33 V AC

FUNCTIONS

Process value input (configurable)

Resolution: *23 bits*

Measurement cycle: 50 ms

DC signal: mV

Sensitivity / sensor	Span
0.5 mV/V	5 mV
1 mV/V	10 mV
2 mV/V	20 mV
4 mV/V	40 mV

Input resistance: 1 MΩ

Display error: = 0.1 % ± 1 digit

Customer specific linearisation

Up to 31 segments / 32 data points, only configurable with BlueControl® (not via the front panel).

Interference at input

(acc. to DIN IEC 770 6.2.4)
Common mode interference: negligible
Series mode interference: no effect from 1 V_{rms} with 10 mV

STRAIN-GAUGE BRIDGE SUPPLY (U_S)

10 VDC, max. 125 mA
Correction via 'sense' lead

Signal processing

The selected input signal is converted into an analog output signal or is accessible at the interface.

- Tare adjustment by suppression of empty weight / preload
- Scaling
- 1st-order filter with adjustable parameters (bandwidth, see below)
- Linearization with 31 segments

Behaviour on sensor break/short circuit

- Response of the analog output is selectable (upscale / downscale)
- Preset substitute input value, can be disabled

Tare function

Setting the tare signal the actual process value is reset to zero. Further measurements work with the offset, e.g. to subtract the tare weight.

Zero shift can be extended over the entire measurement range.
The function can be enabled via a digital input, a limit value, the interface, or by means of a front key combination.

Zero setting

Special tare function for "permanent" shift of the zero point and for monitoring the measuring range.
The function can be enabled via a digital input, a limit value, the interface, or by means of a front key combination.

Min/max indicator (slave pointer)

The minimum and maximum input values are stored in the CI 45, and can be displayed by means of the keys ▼ (minimum) and ▲ (maximum). The values are resettable.

Dead load compensation

Dead load compensation is practically the same as zero setting, except that the data are stored permanently in the unit's configuration.

Integrator

The function is implemented as a load value integral.
The function can be reset via a digital input, a limit value, the interface, or by means of a front key combination.

Dosing

Recipe handling
The batching function can be enabled via a digital input, a limit value, the interface, or by means of a front key combination.

Display of engineering units

The engineering unit for the measured value can either be selected from a predefined list of standard units, or it can be defined by the user (BlueControl®). The unit appears in the second line of the display.

CALIBRATION FUNCTION

This function permits switching of the calibration resistor that is fitted into melt pressure sensors. This enables the sensor function to be checked. Furthermore, the function can be used for scaling the sensor while it is being commissioned.

FILTER

Every input is fitted with a 1st-order filter that is adjustable for time constant or bandwidth.
The bandwidth is the adjustable tolerance range within which the filter is active above and below the process value. Measurement value changes in excess of the adjusted bandwidth are not filtered.

Fig. 3 : Filter function

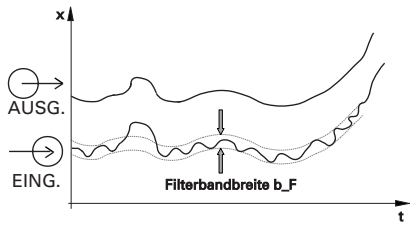

LIMIT VALUE FUNCTIONS

3 limit values available.

– MAX, MIN or MAX + MIN in phys. units, adjaustable.

Hysteresis

– Parameter adjustable in engineering units.

Discriminator (interference suppression)

– Adjustable from 0...9999 s.

Signalling

– Via red LED in the housing front (lights up on alarm)

– Via switching output (configured as NO or NC contact)

Functions

- Input value monitoring
- Input value monitoring with storage
- Signalchange / with storage
- Resetting via front or digital input
- Alarm discriminator adjustable from 0...9.999 seconds
- Several limit values and alarm messages can be logically "OR-linked".
- Limits can used as control signals.
- Zero shift limiting

ALARMS

Sensor break / short circuit

Depending on the selected input type, the input circuit is monitored for break, short circuit, and reversed polarity.

MAINTENANCE MANAGER

Display of error messages, warnings, and stored limit value messages in the error list. Messages are stored, and can be reset manually.
Possible elements in the error list:

Sensor break, short circuit, incorrect polarity
Stored limit values
E.g. Re-calibration warning (message is generated when a predefined operating time is reached)
E.g. Maintenance interval for a switching device (message is generated when a predefined number of switching cycles is reached)
Internal fault (RAM, EEPROM, ...)

DISPLAY AND OPERATION

Display

LCD

dual-line plus additional display elements

Upper line

4 digits, 7-segment LCD for process value

Lower line

5 digits, 14-segment LCD; configurable contents (via BlueControl®)

- Setpoint
- Output value
- Engineering unit
- Parameters
- Extended Operating Level

Additional display elements

4 display elements (bars in the lower line of the LCD)

- Marked 1 & 2: OUT1 / OUT2
- Marked F:
  Function active (e.g. TARA)
- Marked E:
  Entry has been made in the error list

LED

Dual-colour indicator	
Green:	OK
Green, blinking:	no data exchange with bus coupler (only for devices with system option)
Red:	limit value Lim1 exceeded
Red,	blinking: internal fault, configuration mismatch

Operating functions

Only three keys at the front of the KS 45 are used to operate process values, parameters, and configuration data. Different Operating Levels and selected parameters can be disabled by means of BlueControl®.

POWER SUPPLY

Depending on ordered version:

AC supply

Voltage:	90...260 V AC
Frequency:	48...62 Hz
Consumption:	approx. 11.5 VA max.

Universal supply 24 V UC*

AC supply:	18...30 V AC
Frequency:	48...62 Hz
DC supply:	18...31 V DC
Consumption:	approx. 8.5 VA / 5.8W max.

Supply only with protective low voltage (SELV)

➢ cULus class II only-!

** Devices with system option:*
They are supplied via the bus connector from bus coupler or power supply module.

Behaviour with power failure

Configuration and parameter settings:Permanent storage in EEPROM

BLUEPORT® FRONT INTERFACE

Connection to the controller front via a PC adapter (see 'Additional Accessories'). The BlueControl® software enables the KS 45 to be configured, parameters set, and operated.

Fig. 4: Dimensions

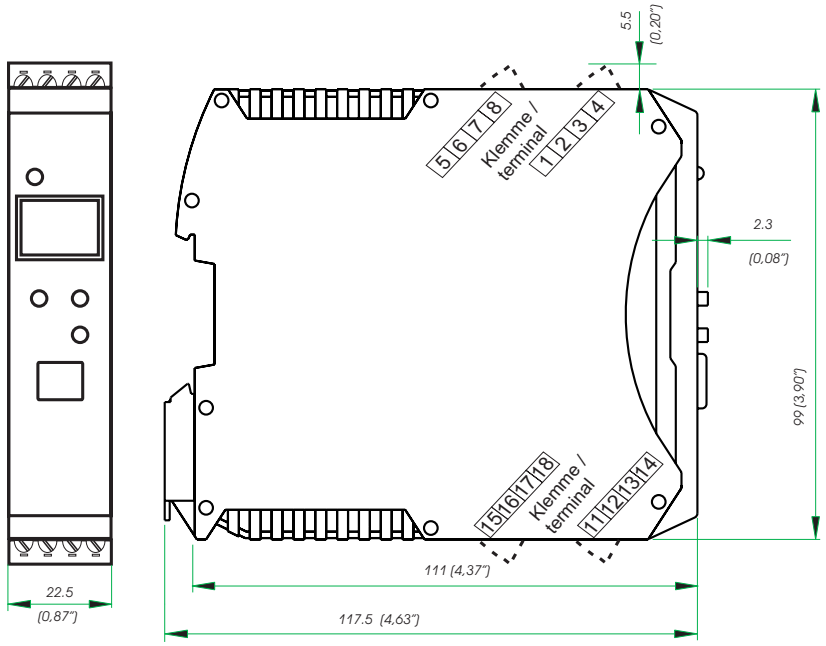

BUS INTERFACE (OPTIONAL)

RS 485

Connection via bus connector fitted in the top-hat rail. Screened cables should be used.

Galvanically isolated

Type:	RS 485

Transmission speed:
2,400, 4,800, 9,600, 19,200, 38,400 bits/sec

Parity:	even, odd, none
Address range:	1...247

Number of controllers per bus segment: 32

Protocol:

- MODBUS RTU

SYSTEM INTERFACE

For connection to fieldbus couplers (see system components)
Connection via bus connector fitted in the top-hat rail.
Technical data see data sheet 9498-737-50911.

ENVIRONMENTAL CONDITIONS

Protection mode

Front panel:	IP 20
Housing:	IP 20
Terminals:	IP 20

Permissible temperatures

For specified accuracy:	-10...55°C
Warm-up time:	< 20 minutes
Temperature effect:	≤ 0.02% / 10 K
add. influence to cold junction compensation:	≤ 0.05% / 10 K

Operating limits:	-20...60°C
Storage:	-30...70°C

Humidity

Max. 95%, 75% yearly average, no condensation

Shock and vibration

Vibration test Fc (DIN EN 60 068-2-6)

Frequency:	10...150 Hz
Unit in operation:	1g or 0.075 mm
Unit not in operation:	2g or 0.15 mm

Shock test Ea (DIN EN 60 068-2-27)

Shock:	15 g

Duration:
11 ms

Electromagnetic compatibility

Meets the test requirements for devices in industrial areas.
Interference radiation:

- Within the limits for Class A devices.

Immunity to interference:

- Complies with EN 61 326-1 for continuous, unattended operation.

GENERAL

Housing front

Material: Polyamide PA 6.6
Flammability class: VO (UL 94)

Connecting terminals

Material: Polyamide PA
Flammability class: V2 (UL 94) for screw terminals
V0 (UL 94) for spring-clamp terminals and bus connector

Electrical safety

Complies with EN 61 010-1

Over-voltage category II
Contamination degree 2
Protection class II

CE marking

Meets the EuropeanDirectives regarding „Electromagnetic Compatibility" and „Low-voltage equipment" (see also „Safety tests")

cUL certification

(Type 1, indoor use)
File: E 208286
For compliance with UL certificate, the following information must be taken into account:

- Use only 60/75°C copper (Cu, 12-30 AWG) conductors .
- Tighten the terminal-screws with a torque of 0.5 – 0.6 Nm.
- Max. ambient temperature: 55 °C
- Max. ratings of relay contacts: 250VAC, 2A (resistive)
- Power supply from class II

Electrical connections

Plug-in connector strips with choice of terminal type:

- Screw terminals or spring-clamp terminals, both for lead cross-sections from 0.2 to 2.5 mm^2. (AWG24-12)

Mounting method

Clip-on rail mounting (35 mm top-hat rail to EN 50 022).
Locked by means of metal catch in housing base.
Close-packed mounting possible.

Mounting position: vertical

Weight:
200g

Table 1: BlueControl®: Versions and functions

Functionality	Mini	Basic	Expert
parameter and configuration setting	yes	yes	yes
download: writes an engineering to the device	yes	yes	yes
online-mode / visualisation	SIM only	yes	yes
creation of user defined linearizations	yes	yes	yes
configuration of extended operation level	yes	yes	yes
upload: reads an engineering from the device	SIM only	yes	yes
basic diagnosis function	no	no	yes
saves files and engineering data	no	yes	yes
printer function	no	yes	yes
online documentation / help system	yes	yes	yes
measurement correction (calibration procedure)	yes	yes	yes
data acquisition and trend function	SIM only	yes	yes
personal assistant function	yes	yes	yes

ACCESSORIES

BlueControl® (Engineering Tool)

PC software package for configuring, parameter setting, and operating (commissioning) the KS 45 controller. Moreover, all settings are saved and can be printed, if required.

Depending on version, a powerful data acquisition module with trend graphics is available.

Show/hide function

The BlueControl® software enables any number of parameters and configuration setting to be shown/hidden. This ensures that only permitted parameters & settings can be changed in the controller. Safety-relevant parameters are not displayed.

Simulation function

The built-in simulation serves to test the settings.
Software requirements:
Windows 95/98/NT/2000/XP

Configuration settings made only via the BlueControl® software (not via the controller's front keys)

- Customer-specific linearization
- Enable forcing for inputs and outputs
- Setting the limits for operating hours and switching cycles
- Blocking operator functions, Operating Levels, and password definition
- Text setting
- Definition of the display contents

Fig.5: Hiding of interface parameters: only the address is visible

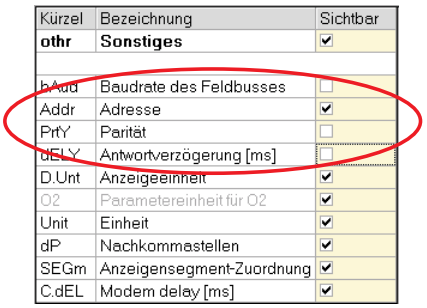

Kürzel	Bezeichnung	Sichtbar
othr	**Sonstiges**	☑
bAud	Baudrate des Feldbusses	☐
Addr	Adresse	☑
PrtY	Parität	☐
dELY	Antwortverzögerung [ms]	☐
D.Unt	Anzeigeeinheit	☑
O2	Parametereinheit für O2	☑
Unit	Einheit	☑
dP	Nachkommastellen	☑
SEGm	Anzeigensegment-Zuordnung	☑
C.dEL	Modem delay [ms]	☑

Hardware requirements

A special PC adapter (see 'Additional Accessories') is required for connecting to the controller.

Updates and demo software from:
www.pma-online.de

Fig. 6: Accessories

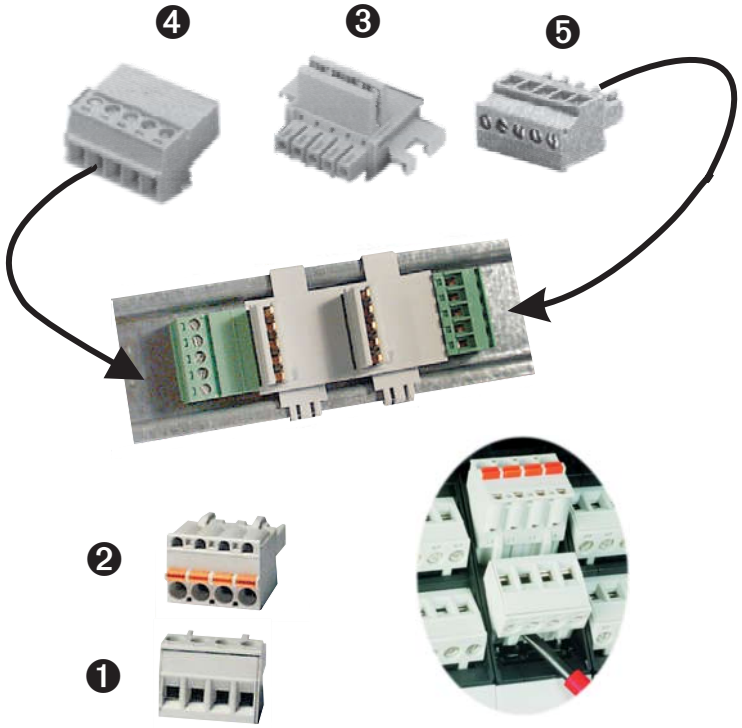

ACCESSORIES

Description	Quantity	Order no.
❶ **Connector set with screw terminals**	4 pcs.	**9407-998-07101**
❷ **Connector set with spring-clamp terminals**	4 pcs.	**9407-998-07111**
❸ **Bus connector for fitting in top-hat rail**	1 piece	**9407-998-07121**
❹ **Plug for bus connection, inverted, connections at left, horizontal cable entry**	1 piece	**9407-998-07131**
❺ **Plug for bus connection, connections at right, vertical cable entry**	1 piece	**9407-998-07141**

ADDITIONAL ACCESSORIES

Description		Order no.
PC adapter for the BluePort® front interface		9407-998-00001
USB serial adaptor (USB to RS 232)		9407-998-00081
Converter RS 232 to RS 422/485	galv. isolated	ADAM-4520-D
BlueControl® Mini	German/English	www.pma-online.de
BlueControl® with Basic license rail line	German/English	9407-999-12001
BlueControl® with Expert license rail line	German/English	9407-999-12011

Standard accessories:

- Operating notes
- Devices with 'Interface' option: bus connector for fitting into top-hat rail

ORDERING DATA

Transmitter
UNIFLEX SG 45

SG45-1 _ _ - _ 00 _ 0 - _ 00

1 measuring input, 1 digital input with display and BluePort®-interface		
without plug-in connector terminals	**0**	
with screw-terminal connectors	**1**	
90..260V AC, mA/V/logic + 2 relays	**4**	
18...30VAC/18..31VDC, mA/V/logic+2 relays	**5**	
no option		**0**
RS 485 / MODBUS - protocol		**1**
Systeminterface (24V versions only)		**2**
Standard configuration		**0**
Configuration to order		**9**
Standard (CE-certification)		**0**
cULus - certification		**U**

SYSTEM COMPONENTS

Fieldbuscoupler CAN	**RL40-111-00000-000**
Fieldbuscoupler CAN, UL / cUL	**RL40-111-00000-U00**
Fieldbuscoupler PROFIBUS DP	**RL40-112-00000-000**
Fieldbuscoupler PROFIBUS DP, UL / cUL	**RL40-112-00000-U00**
Fieldbuscoupler Ethernet Modbus TCP	**RL40-114-00000-000**
Fieldbuscoupler Ethernet Modbus TCP, UL / cUL	**RL40-114-00000-U00**
Power supply module	**RL40-119-00000-000**
Power supply module, UL / cUL	**RL40-119-00000-U00**

➢ Please order the associated documentation

Description	Order no.
Operating instructions SG 45 (D)	**9499-040-82318**
Operating instructions SG 45 (E)	**9499-040-82311**
Interface description for MODBUS rail line (D)	**9499-040-72018**
Interface description for MODBUS rail line (E)	**9499-040-72011**
Interface description for PROFIBUS-DP (D)	**9499-040-77118**
Interface description for PROFIBUS-DP (E)	**9499-040-77111**
Datasheet systemcomponents rail line (D)	**9498-737-50933**
Datasheet systemcomponents rail line (E)	**9498-737-50913**

PMA
Prozeß- und Maschinen- Automation GmbH
P.O. Box 31 02 29
D-34058 Kassel
Tel.: +49 - 561- 505 1307
Fax: +49 - 561- 505 1710
E-mail: mailbox@pma-online.de
Internet: http://www.pma-online.de

Your local representative

Printed in Germany - Edition 10/2009- Subject to change without notice - 9498 737 54513