Product data sheet

Specifications



Photoelectric sensors XU, XUY 989, receiver, Sn 4 m, 12...24 VDC, M8

XUYRCO989SP

Main

Range of product	Telemecanique Photoelectric sensors XU
Series name	Application
Electronic sensor type	Photo-electric sensor
Sensor name	XUY
Sensor design	Miniature
Detection system	Thru beam
Material	Plastic
Type of output signal	Discrete
Supply circuit type	DC
Wiring technique	4-wire
Discrete output type	PNP
Discrete output function	1 NO or 1 NC programmable
Electrical connection	1 male connector M8, 4 pins
Product specific application	Conveyor system and access control series
Emission	Red LED, pulsed
[Sn] nominal sensing distance	1 m polarised reflex 4 m thru beam 0.08 m diffuse with background suppression 0.25 m diffuse with adjustable sensitivity

Complementary

Enclosure material	ABS
Lens material	PMMA
Cover material	PUR
Pulse frequency	6 kHz
Output type	Solid state
[Us] rated supply voltage	12...24 V DC with reverse polarity protection
Supply voltage limits	10…30 V DC
Switching capacity in mA	100 mA (overload and short-circuit protection)
Switching frequency	500 Hz
Maximum voltage drop	<2 V at 100 mA (closed state)

Disclaimer: This documentation is not intended as a substitute for and is not to be used for determining suitability or reliability of these products for specific user applications

	<1 V at 10 mA (closed state)
Current consumption	< 25 mA no-load
Maximum delay response	1 ms
Net weight	0.044 kg

Environment

Product certifications	cULus CE
Ambient air temperature for operation	0…50 °C
Ambient air temperature for storage	-20…80 °C
IP degree of protection	IP65 conforming to IEC 60529 IP67 conforming to IEC 60529

Packing Units

Unit Type of Package 1	PCE
Number of Units in Package 1	1
Package 1 Weight	44.0 g
Package 1 Height	3.5 cm
Package 1 width	7 cm
Package 1 Length	13 cm
Unit Type of Package 2	S01
Number of Units in Package 2	15
Package 2 Weight	869.0 g
Package 2 Height	15 cm
Package 2 width	15 cm
Package 2 Length	40 cm

Offer Sustainability

REACh Regulation	REACh Declaration
EU RoHS Directive	Pro-active compliance (Product out of EU RoHS legal scope) EU RoHS Declaration
Mercury free	Yes
RoHS exemption information	Yes
California proposition 65	WARNING: This product can expose you to chemicals including: Diisononyl phthalate (DINP), which is known to the State of California to cause cancer, and Di-isodecyl phthalate (DIDP), which is known to the State of California to cause birth defects or other reproductive harm. For more information go to www.P65Warnings.ca.gov

Contractual warranty

Warranty	18 months

Product data sheet XUYRCO989SP

Dimensions Drawings

Dimensions

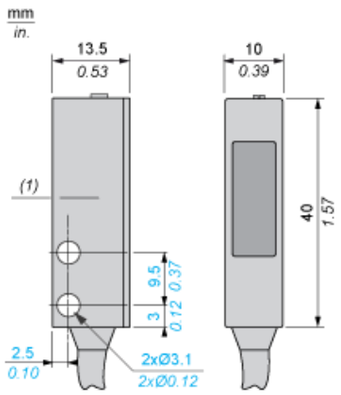

(1) Optical axis

Connections and Schemes

M8

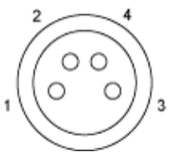

PNP Output

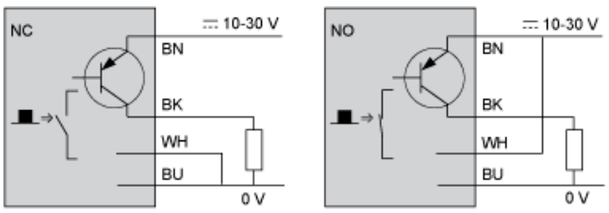

1/BN : Brown
2/WH : White
3/BU : Blue
4/BK : Black