

Model number

VAA-4E2A-G1-ZE/P-S

Pneumatic module
4 inputs/2 pneumatic outputs

Features

- AS-Interface certificate
- Protection degree IP65
- Flat or round cable connection (via standardized EMS base, not included with delivery)
- Cable piercing method for flat cable
- Inputs for 2- and 3-wire sensors
- Function display for bus, inputs and outputs
- Direct connection of pneumatic cylinders

Dimensions

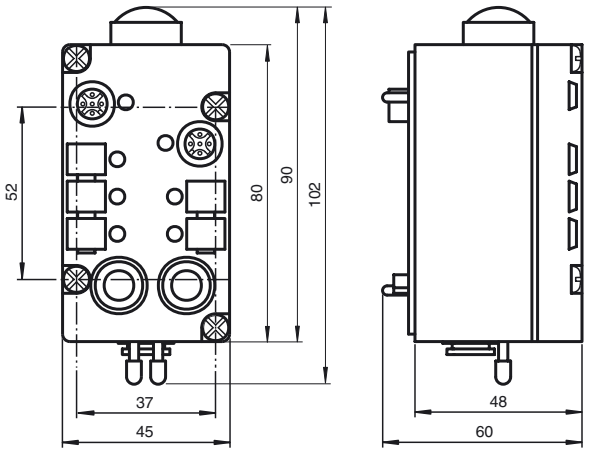

Electrical connection

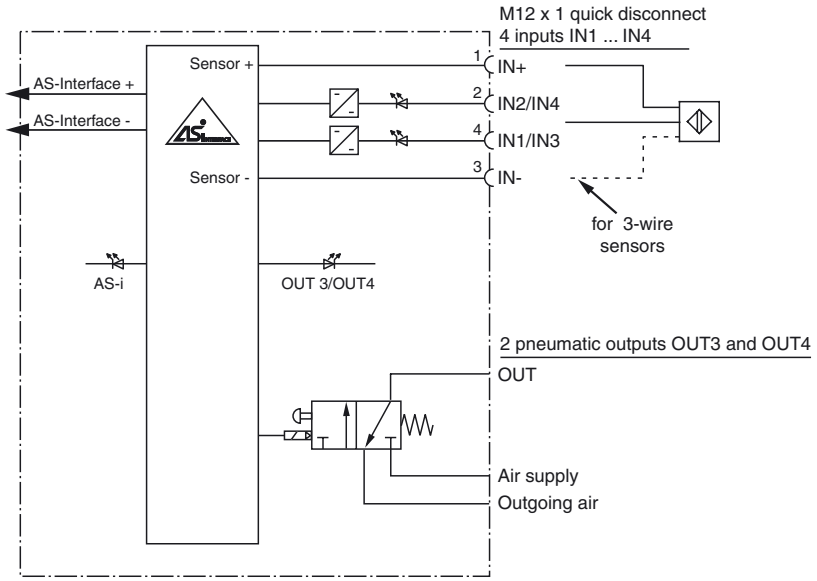

Indicating / Operating means

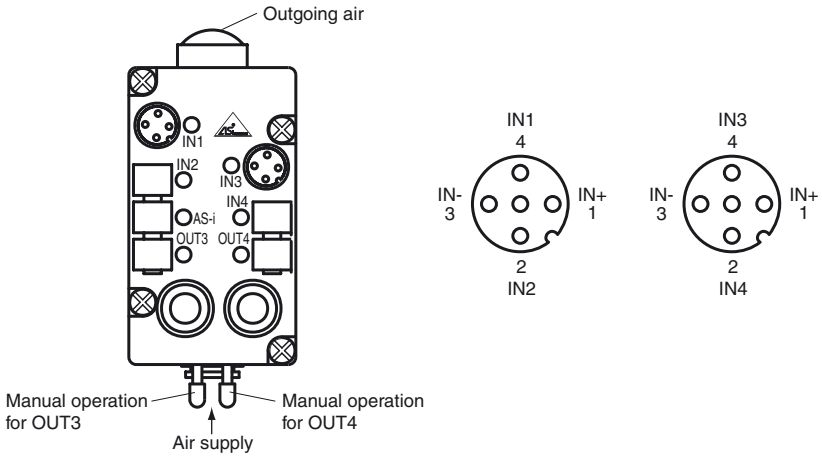

Release date: 2011-07-13 15:13 Date of issue: 2011-07-13 130938_eng.xml

Technical data

General specifications		
Slave type		Standard slave
Functional safety related parameters		
$MTTF_d$		44 a
Mission Time (T_M)		10 a
Diagnostic Coverage (DC)		0 %
Indicators/operating means		
LED AS-i		AS-Interface voltage; LED green
LED IN		switching state (input); 4 LED yellow
LED OUT		Switching state (output); 2 LED yellow
Electrical specifications		
Rated operational voltage	U_e	26.5 ... 31.6 V from AS-Interface
Rated operational current	I_e	≤ 45 mA (without sensors) ≤ 200 mA (complete)
Input		
Number/Type		2x 2 inputs for 2- or 3-wire sensors (PNP), DC
Supply		from AS-Interface
Current loading capacity		≤ 100 mA, short-circuit protected
Switching point		OFF: ≤ 1.5 mA ON: ≥ 5 mA, ≥ 10 V
Output		
Number/Type		2 pneumatic outputs with separated 3/2-way valves
Pneumatic output		
Venting guide		Sinter filter
Compressed air		2 ... 8 bar, filtered (5 µm), oiled or unoiled compressed air
Air throughput		550 Nl/min at 6/0 bar 350 Nl/min at 6/5 bar Nl = Standard litre
Valve cross-section		5 mm
Programming instructions		
Profile		S-7.F
IO code		7
ID code		F
ID1 code		F
ID2 code		F

Data bits (function via AS-Interface)	**input**	**output**
D0	IN1	-
D1	IN2	-
D2	IN3	OUT3
D3	IN4	OUT4

Parameter bits (programmable via AS-i)	**function**
P0	not used
P1	not used
P2	not used
P3	not used

Ambient conditions	
Ambient temperature	0 ... 55 °C (32 ... 131 °F)
Storage temperature	-20 ... 85 °C (-4 ... 185 °F)
Mechanical specifications	
Protection degree	IP65 according to EN 60529
Connection	cable piercing methos or terminals flat cable or standard round cable inputs: M12 x 1 quick disconnect outputs: plug-in hose connector (8 mm)
Mass	approx. 200 g
Mounting	DIN rail or screw mounting

Function

The VAA-4E2A-G1-ZE/P-S module features 4 inputs for the connection of 2- or 3-wire sensors and 2 pneumatic outputs with a high air flow rate for direct control of pneumatic drives in the field. 2 separate 3/2-way valves are integrated in the module. Both the valve and the sensors connected to the module are supplied via the bus cable.
The sensors are connected to the module via M12 x 1-circular connectors; the outputs are connected to the pneumatic drive via standard hose plug-in connectors (LEGRIS LF 3000, 8 mm).
Various bases are available for the module.The U-G1F (or U-G1FA) base provides the connection to the AS-Interface flat cable; the U-G1P base provides the connection to a round cable.
It happens very frequently that output modules must be installed in series with the pneumatic module. If the outputs of the output modules are supplied with external power transferred via a flat cable, a suitable EEMS base (U-G1FF or U-G1FFA) must be used for the pneumatic module. In this case, VAA-4E2A-G1-ZE/P-S accesses the AS-Interface cable instead of the power supply cable.

Note:
The slave address must be programmed before commissioning (default setting 0).
Medium: Filtered (5 µm), oiled or unoiled compressed air (2 ... 8 bars).

Warning:
Dangerous electric voltage can lead to electric shock and burns. The system must be disconnected from the power supply before the beginning of the works.

Accessories

VBP-HH1-V3.0
AS-Interface Handheld

Matching system components

U-G1F
AS-Interface module mounting base for connection to flat cable (AS-Interface)

U-G1P
AS-Interface module mounting base for connection to round cable (AS-Interface)

U-G1FA
AS-Interface module mounting base with adressing jack for connection to flat cable (AS-Interface)

Release date: 2011-07-13 15:13 Date of issue: 2011-07-13 130938_eng.xml

Subject to modifications without notice
Copyright Pepperl+Fuchs
Pepperl+Fuchs Group www.pepperl-fuchs.com
USA: +1 330 486 0001 fa-info@us.pepperl-fuchs.com
Germany: +49 621 776-4411 fa-info@pepperl-fuchs.com
Singapore: +65 6779 9091 fa-info@sg.pepperl-fuchs.com
PEPPERL+FUCHS SENSING YOUR NEEDS

Notes

Examples for functions of the AS-Interface Airbox

as 3/2-way valve

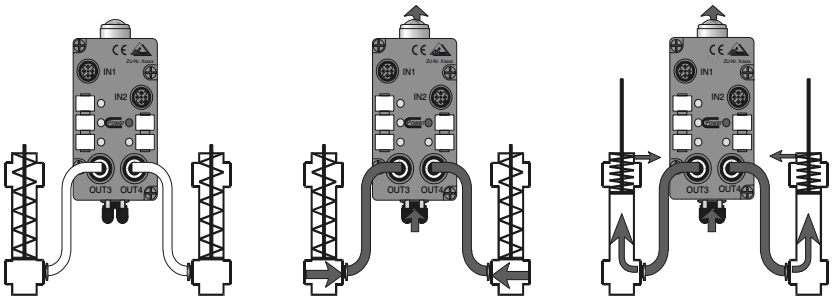

as 4/2-way valve

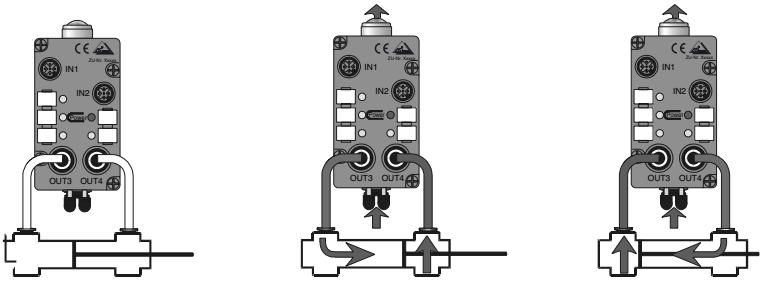

as 5/2-way valvel

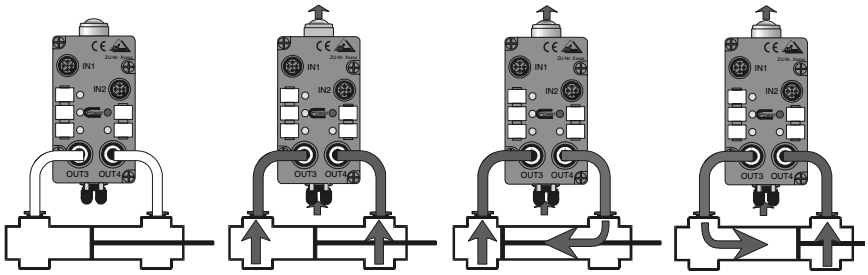

as 5/2-way valve

Unpressurized | Pressurized | Switched

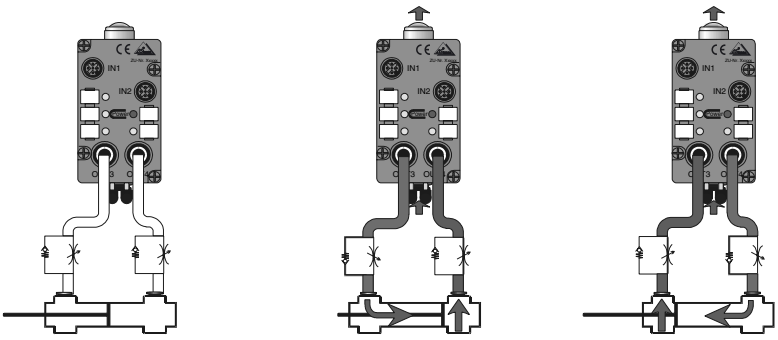

Release date: 2011-07-13 15:13 Date of issue: 2011-07-13 130938_eng.xml