E40207

T-piece

T-PIECE D 35X3-M18X1.5

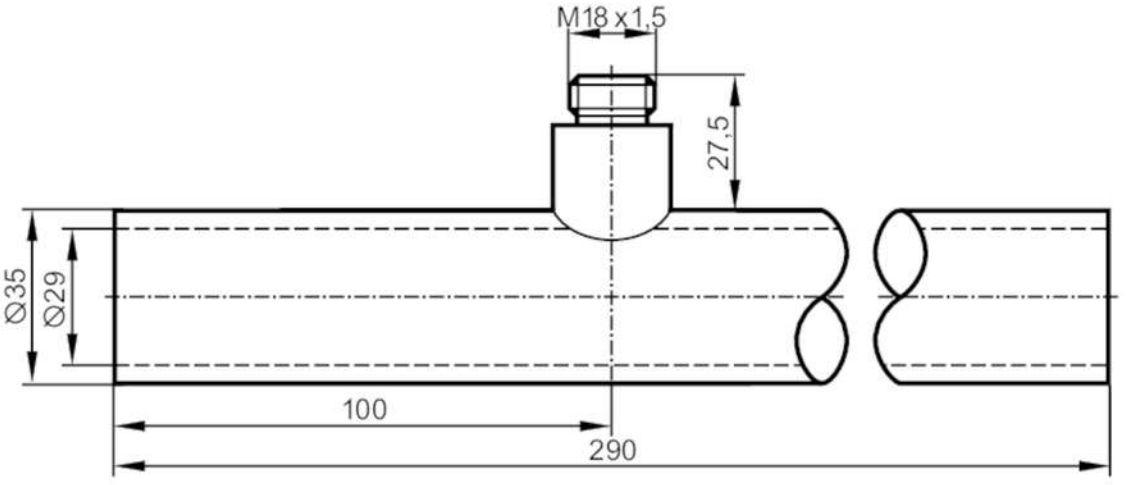

Application		
Design		for sensors with process connection M18x1,5
Application		for industrial applications
Media		liquids and gases
Pressure rating	[bar]	30
Tests / approvals		
Pressure Equipment Directive		A possible classification to PED depends on the application and has to be carried out by the user / operator.
Pressure Equipment Directive EAC		The adapter is intended for use in devices, machines and installations that do not fall under the categories of the technical rule TR CU 032/2013.
Safety instructions		The compatibility between medium and product material has to be checked in all applications.
Mechanical data		
Weight	[g]	898
Materials		stainless steel (1.4571/316Ti)
Sensor connection		M18 x 1,5
Process connection		welding adapter Ø 35 mm
Remarks		
Pack quantity		1 pcs.