DATASHEET - DILMP20(24V50HZ)



Contactor, 4 pole, AC operation: 22 A, 24 V 50 Hz, Screw terminals

Part no.	**DILMP20(24V50HZ)**
Catalog No.	**276957**
Alternate Catalog No.	**XTCF020B00U**
EL-Nummer (Norway)	**4130326**

Delivery program

Product range			Contactors
Application			Contactors for 4 pole electric consumers
Subrange			Contactors up to 200 A, 4 pole
Utilization category			AC-1: Non-inductive or slightly inductive loads, resistance furnaces AC-3/AC-3e: Normal AC induction motors: Starting, switching off while running
Connection technique			Screw terminals
Number of poles			4 pole
Rated operational current			
AC-1			
Conventional free air thermal current, 3 pole, 50 - 60 Hz			
at 40 °C	$I_{th} = I_e$	A	22
at 50 °C	$I_{th} = I_e$	A	21
at 55 °C	$I_{th} = I_e$	A	20.5
at 60 °C	$I_{th} = I_e$	A	20
Contact sequence			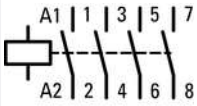
For use with			DILM32-XHI(C)… DILA-XHI(V)(C)…
Actuating voltage			24 V 50 Hz
Voltage AC/DC			AC operation
Connection to SmartWire-DT			no
Instructions			Contacts to EN 50 012.

Technical data

General

Standards			IEC/EN 60947, VDE 0660, UL, CSA
Lifespan, mechanical			
AC operated	Operations	x 10^6	10
DC operated	Operations	x 10^6	10
Operating frequency, mechanical			
AC operated	Operations/h		5000
DC operated	Operations/h		5000
Climatic proofing			Damp heat, constant, to IEC 60068-2-3 Damp heat, cyclic, to IEC 60068-2-30
Ambient temperature			
Open		°C	-25 - +60
Enclosed		°C	- 25 - 40
Storage		°C	- 40 - 80
Mounting position			
Mounting position			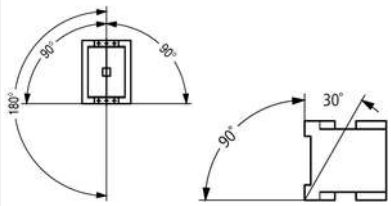

Mechanical shock resistance (IEC/EN 60068-2-27)			
Half-sinusoidal shock, 10 ms			
Main contacts			
N/O contact		g	10
Auxiliary contacts			
N/O contact		g	7
N/C contact		g	5
Degree of Protection			IP20
Altitude		m	Max. 2000
Protection against direct contact when actuated from front (EN 50274)			Finger and back-of-hand proof
Stripping length		mm	10
Terminal capacity main cable			
Solid		mm^2	1 x (0.75 - 4) 2 x (0.75 - 2.5)
Flexible with ferrule		mm^2	1 x (0.75 - 2.5) 2 x (0.75 - 2.5)
Solid or stranded		AWG	18 - 14
Terminal screw			M3.5
Tightening torque		Nm	1.2
Stripping length		mm	10
Push-in terminals			
Solid		mm^2	1 x (0.75 - 2.5) 2 x (0.75 - 2.5)
flexible		mm^2	1 x (0.75 - 2.5) 2 x (0.75 - 2.5)
flexible with ferrules		mm^2	1 x (0.75 - 1.5) 2 x (0.75 - 1.5)
Solid or stranded		AWG	18 - 14
Terminal capacity control circuit cables			
Solid		mm^2	1 x (0.75 - 4) 2 x (0.75 - 2.5)
Flexible with ferrule		mm^2	1 x (0.75 - 2.5) 2 x (0.75 - 2.5)
Solid or stranded		AWG	18 - 14
Stripping length		mm	10
Terminal screw			M3.5
Tightening torque		Nm	1.2
Push-in terminals			
Solid		mm^2	1 x (0.75 - 2.5) 2 x (0.75 - 2.5)
Flexible		mm^2	1 x (0.75 - 2.5) 2 x (0.75 - 2.5)
Flexible with ferrule		mm^2	1 x (0.75 - 1.5) 2 x (0.75 - 1.5)
Solid or stranded		AWG	18 - 14
Tool			
Main cable			
Pozidriv screwdriver		Size	2
Standard screwdriver		mm	0.8 x 5.5 1 x 6
Control circuit cables			
Pozidriv screwdriver		Size	2
Standard screwdriver		mm	0.8 x 5.5 1 x 6

Main conducting paths

Rated impulse withstand voltage	U_{imp}	V AC	8000
Overvoltage category/pollution degree			III/3
Rated insulation voltage	U_i	V AC	690
Rated operational voltage	U_e	V AC	690
Safe isolation to EN 61140			

between coil and contacts		V AC	400
between the contacts		V AC	400
Making capacity (cos φ)	Up to 690 V	A	144 According to IEC/EN 60947
Breaking capacity			
220 V 230 V		A	120
380 V 400 V		A	120
500 V		A	100
660 V 690 V		A	70
Short-circuit rating			
Short-circuit protection maximum fuse			
Type “2” coordination			
400 V	gG/gL 500 V	A	20
690 V	gG/gL 690 V	A	20
Type “1” coordination			
400 V	gG/gL 500 V	A	35
690 V	gG/gL 690 V	A	25

AC

AC-1			
Rated operational current			
Conventional free air thermal current, 3 pole, 50 - 60 Hz			
Open			
at 40 °C	$I_{th} = I_e$	A	22
at 50 °C	$I_{th} = I_e$	A	21
at 55 °C	$I_{th} = I_e$	A	20.5
at 60 °C	$I_{th} = I_e$	A	20
enclosed	I_{th}	A	18
Conventional free air thermal current, 1 pole			
open	I_{th}	A	60
enclosed	I_{th}	A	54
Motor rating	P	kWh	
220/230 V	P	kW	8
240 V	P	kW	9
380/400 V	P	kW	14
415 V	P	kW	15
440 V	P	kW	16
500 V	P	kW	18
690 V	P	kW	24
AC-3			
Rated operational current			
Open, 3-pole: 50 – 60 Hz			
Notes			At maximum permissible ambient temperature (open.) Also tested according to AC-3e.
220 V 230 V	I_e	A	12
240 V	I_e	A	12
380 V 400 V	I_e	A	12
415 V	I_e	A	12
440V	I_e	A	12
500 V	I_e	A	10
660 V 690 V	I_e	A	7
Motor rating	P	kWh	
220 V 230 V	P	kW	3.5
240V	P	kW	4
380 V 400 V	P	kW	5.5
415 V	P	kW	7

440 V	P	kW	7.5
500 V	P	kW	7
660 V 690 V	P	kW	6.5

DC

Rated operational current, open			
DC-1			
60 V	I_e	A	22
110 V	I_e	A	22
220 V	I_e	A	6

Current heat loss

3 pole, at I_{th} (60°)		W	3
Impedance per pole		mΩ	2.5

Magnet systems

Voltage tolerance			
AC operated 50 Hz	Pick-up	x U_c	0.8 - 1.1
AC operated 50/60 Hz		x U_c	0.8 - 1.1
Drop-out voltage AC operated	Drop-out	x U_c	0.4 - 0.6
Power consumption of the coil in a cold state and 1.0 x U_S			
AC operated 50/60 Hz	Pick-up	VA	24
AC operated 50/60 Hz	Pick-up	W	19
AC operated 50/60 Hz	Sealing	VA	4
AC operated 50/60 Hz	Sealing	W	1.4
Duty factor		% DF	100
Changeover time at 100 % U_S (recommended value)			
Main contacts			
AC operated			
Closing delay		ms	15 - 21
Opening delay		ms	9 - 18
Permissible residual current with actuation of A1 - A2 by the electronics (with 0 signal).		mA	≤ 1

Rating data for approved types

Switching capacity			
General use		A	20
Short Circuit Current Rating		SCCR	
Basic Rating			
SCCR		kA	5
max. Fuse		A	45
max. CB		A	60
480 V High Fault			
SCCR (fuse)		kA	30
max. Fuse		A	25 Class RK5
600 V High Fault			
SCCR (fuse)		kA	30
max. Fuse		A	25 Class RK5
Special Purpose Ratings			
Electrical Discharge Lamps (Ballast)			
480V 60Hz 3phase, 277V 60Hz 1phase		A	20
600V 60Hz 3phase, 347V 60Hz 1phase		A	20
Incandescent Lamps (Tungsten)			
480V 60Hz 3phase, 277V 60Hz 1phase		A	14
600V 60Hz 3phase, 347V 60Hz 1phase		A	14
Resistance Air Heating			
480V 60Hz 3phase, 277V 60Hz 1phase		A	20
600V 60Hz 3phase, 347V 60Hz 1phase		A	20
Refrigeration Control (CSA only)			
LRA 480V 60Hz 3phase		A	60

FLA 480V 60Hz 3phase		A	10
LRA 600V 60Hz 3phase		A	60
FLA 600V 60Hz 3phase		A	10
Elevator Control			
600V 60Hz 3phase		HP	5
600V 60Hz 3phase		A	6.1

Design verification as per IEC/EN 61439

Technical data for design verification			
Rated operational current for specified heat dissipation	I_n	A	22
Heat dissipation per pole, current-dependent	P_{vid}	W	1
Equipment heat dissipation, current-dependent	P_{vid}	W	3
Static heat dissipation, non-current-dependent	P_{vs}	W	1.4
Heat dissipation capacity	P_{diss}	W	0
Operating ambient temperature min.		°C	-25
Operating ambient temperature max.		°C	60
IEC/EN 61439 design verification			
10.2 Strength of materials and parts			
10.2.2 Corrosion resistance			Meets the product standard's requirements.
10.2.3.1 Verification of thermal stability of enclosures			Meets the product standard's requirements.
10.2.3.2 Verification of resistance of insulating materials to normal heat			Meets the product standard's requirements.
10.2.3.3 Verification of resistance of insulating materials to abnormal heat and fire due to internal electric effects			Meets the product standard's requirements.
10.2.4 Resistance to ultra-violet (UV) radiation			Meets the product standard's requirements.
10.2.5 Lifting			Does not apply, since the entire switchgear needs to be evaluated.
10.2.6 Mechanical impact			Does not apply, since the entire switchgear needs to be evaluated.
10.2.7 Inscriptions			Meets the product standard's requirements.
10.3 Degree of protection of ASSEMBLIES			Does not apply, since the entire switchgear needs to be evaluated.
10.4 Clearances and creepage distances			Meets the product standard's requirements.
10.5 Protection against electric shock			Does not apply, since the entire switchgear needs to be evaluated.
10.6 Incorporation of switching devices and components			Does not apply, since the entire switchgear needs to be evaluated.
10.7 Internal electrical circuits and connections			Is the panel builder's responsibility.
10.8 Connections for external conductors			Is the panel builder's responsibility.
10.9 Insulation properties			
10.9.2 Power-frequency electric strength			Is the panel builder's responsibility.
10.9.3 Impulse withstand voltage			Is the panel builder's responsibility.
10.9.4 Testing of enclosures made of insulating material			Is the panel builder's responsibility.
10.10 Temperature rise			The panel builder is responsible for the temperature rise calculation. Eaton will provide heat dissipation data for the devices.
10.11 Short-circuit rating			Is the panel builder's responsibility. The specifications for the switchgear must be observed.
10.12 Electromagnetic compatibility			Is the panel builder's responsibility. The specifications for the switchgear must be observed.
10.13 Mechanical function			The device meets the requirements, provided the information in the instruction leaflet (IL) is observed.

Technical data ETIM 8.0

Low-voltage industrial components (EG000017) / Power contactor, AC switching (EC000066)			
Electric engineering, automation, process control engineering / Low-voltage switch technology / Contactor (LV) / Power contactor, AC switching (ecl@ss10.0.1-27-37-10-03 [AAB718015])			
Rated control supply voltage Us at AC 50HZ		V	24 - 24
Rated control supply voltage Us at AC 60HZ		V	0 - 0
Rated control supply voltage Us at DC		V	0 - 0
Voltage type for actuating			AC
Rated operation current Ie at AC-1, 400 V		A	22
Rated operation current Ie at AC-3, 400 V		A	12
Rated operation power at AC-3, 400 V		kW	5.5
Rated operation current Ie at AC-4, 400 V		A	10

Rated operation power at AC-4, 400 V	kW	4.5
Rated operation power NEMA	kW	0
Modular version		No
Number of auxiliary contacts as normally open contact		0
Number of auxiliary contacts as normally closed contact		0
Type of electrical connection of main circuit		Screw connection
Number of normally closed contacts as main contact		0
Number of normally open contacts as main contact		4

Approvals

Product Standards		IEC/EN 60947-4-1; UL 60947-4-1; CSA - C22.2 No. 60947-4-1-14; CE marking
UL File No.		E29096
UL Category Control No.		NLDX
CSA File No.		012528
CSA Class No.		2411-03, 3211-04
North America Certification		UL listed, CSA certified
Specially designed for North America		No

Characteristics

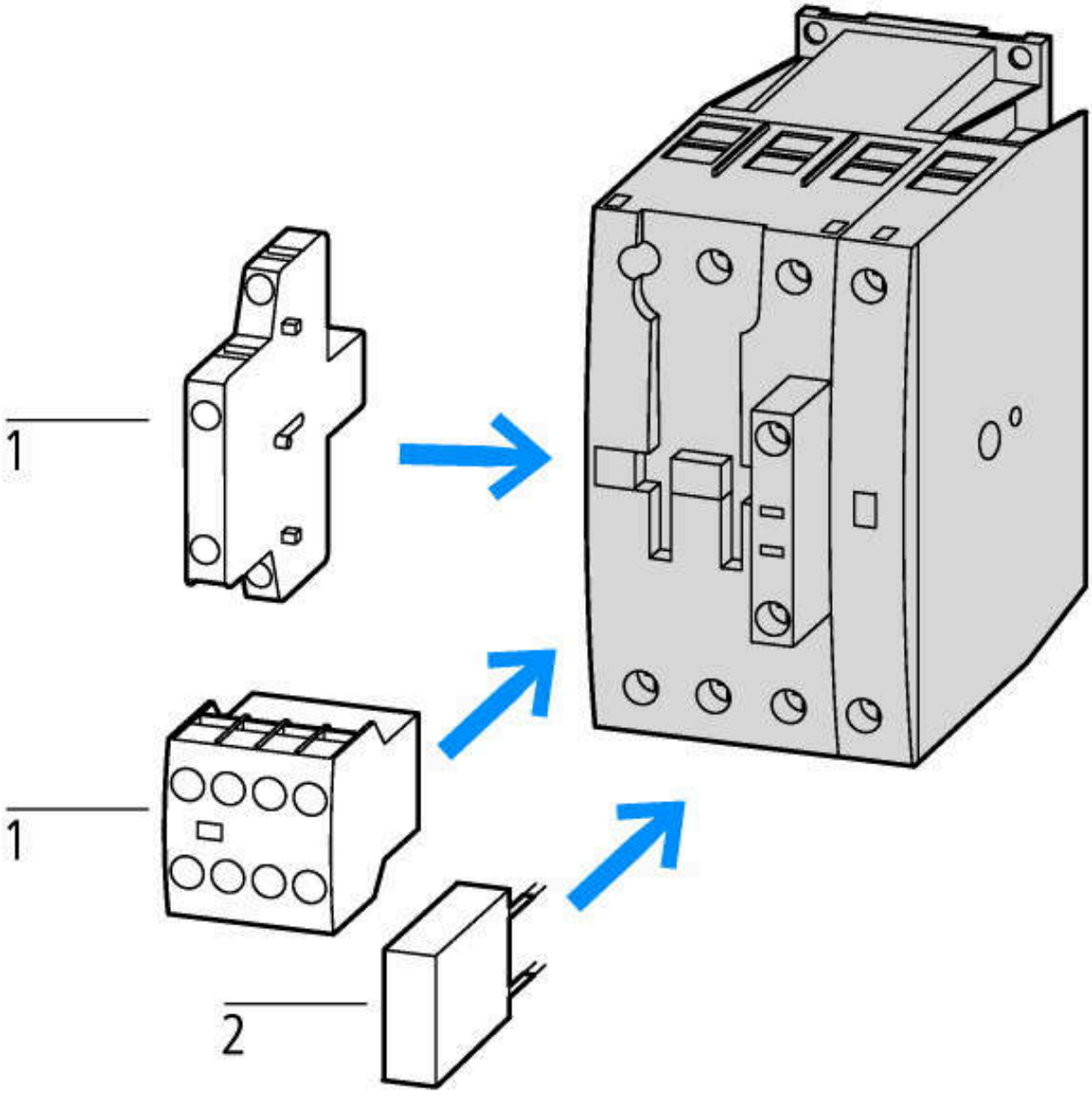

1: Auxiliary contact module
2: Suppressor

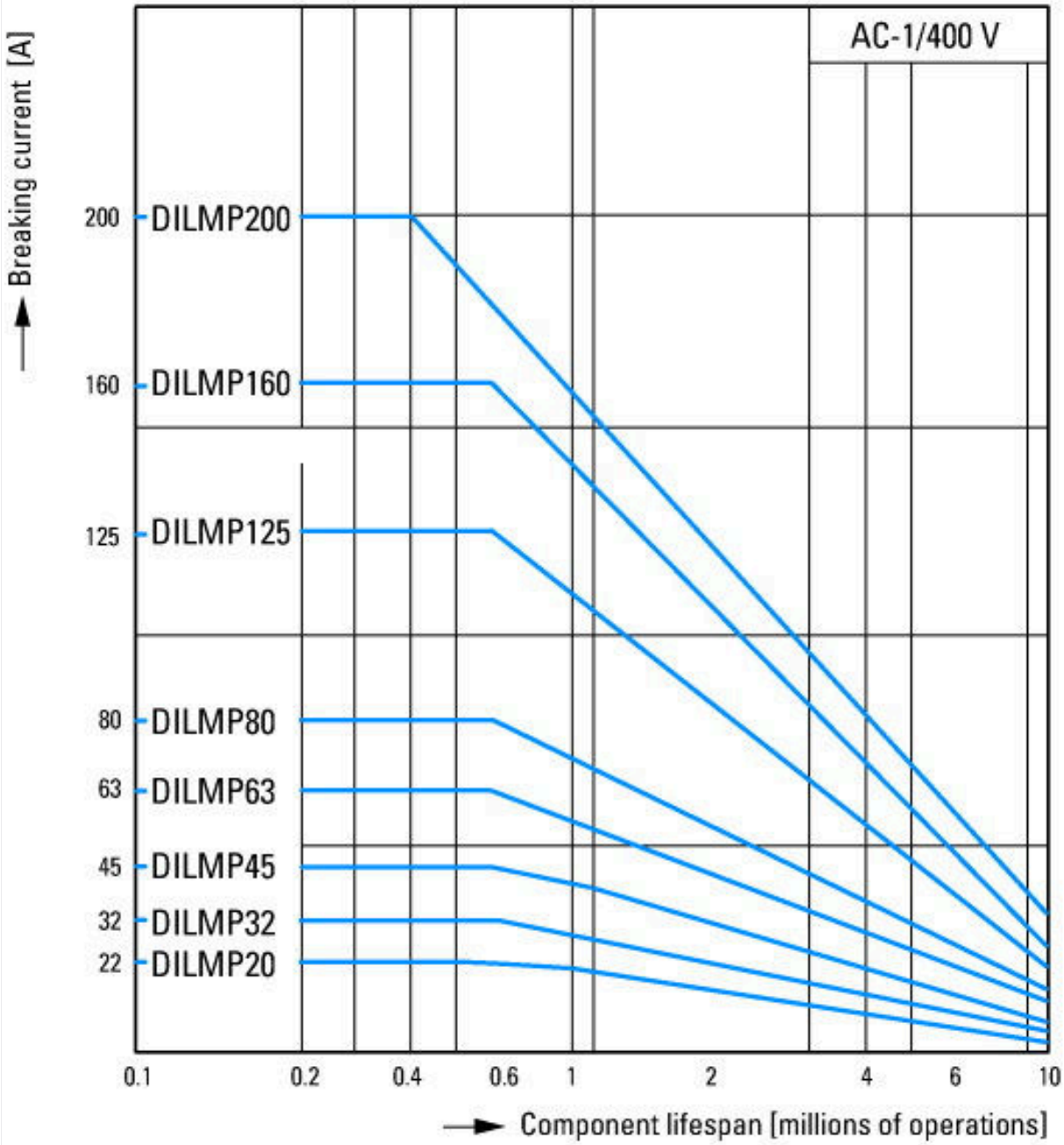

Switching conditions for 4 pole, non-motor loads
Operating characteristics
Non inductive and slightly inductive loads
Electrical characteristics
Switch on: 1 x rated operational current
Switch off: 1 x rated operational current
Utilization category
100 % AC-1
Typical examples of application
Electric heat

Dimensions

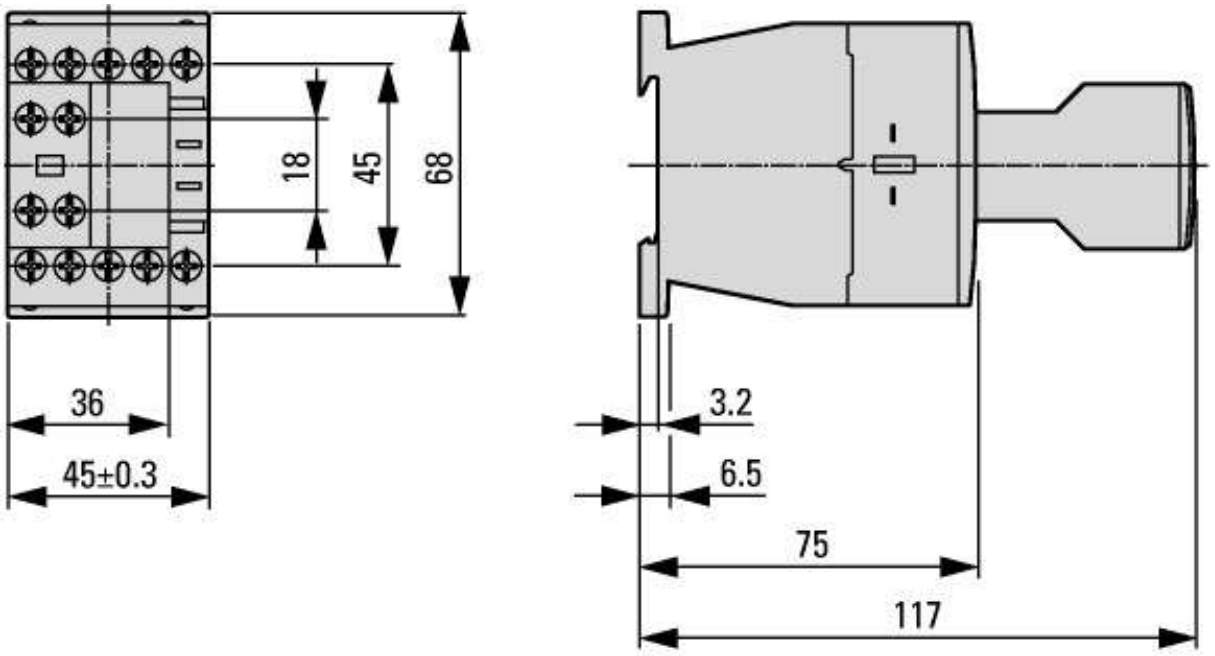

Contactor with auxiliary contact module

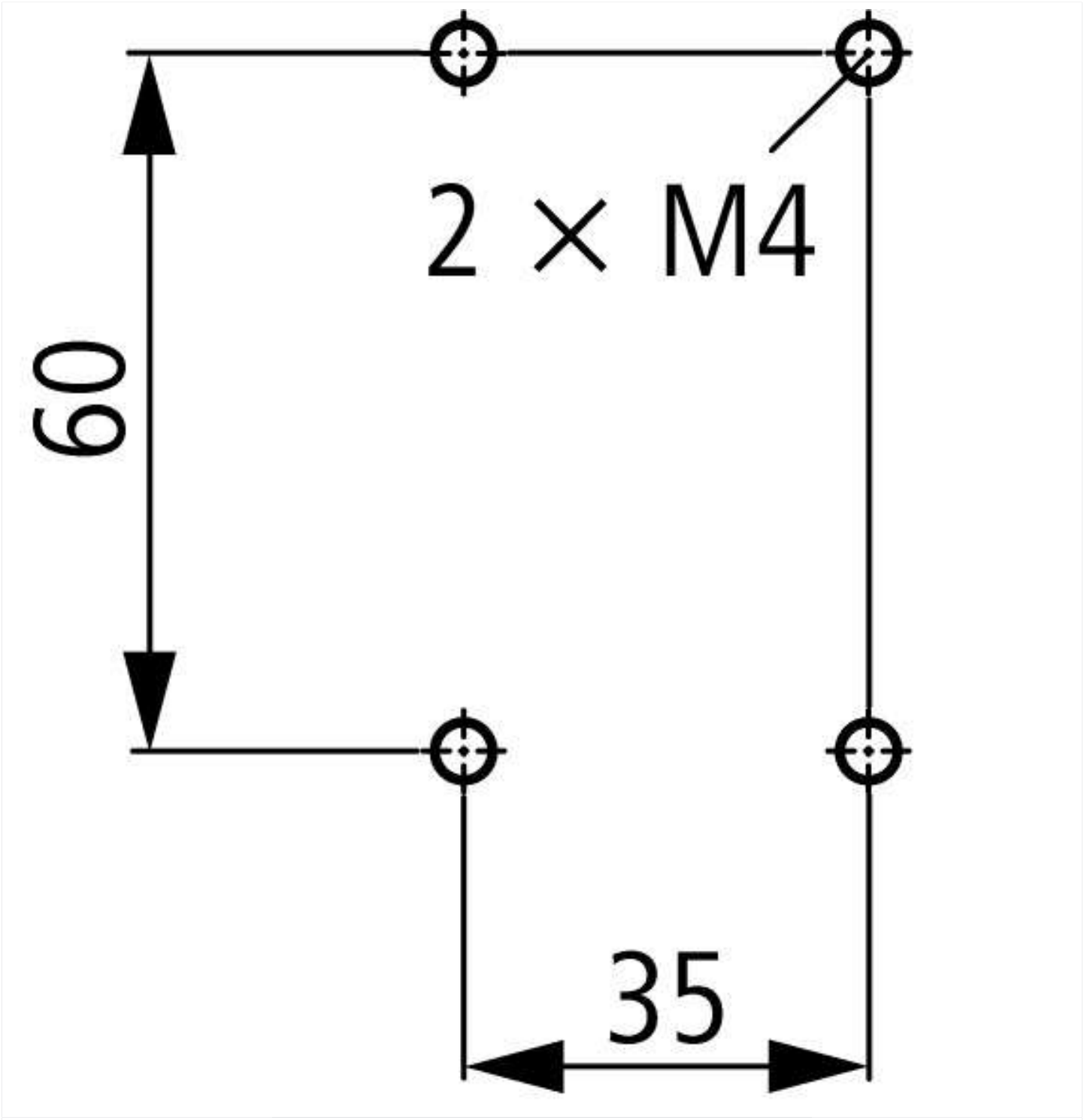

DILMP20

Additional product information (links)

IL03407013Z (AWA2100-2126) Contactors	
IL03407013Z (AWA2100-2126) Contactors	https://es-assets.eaton.com/DOCUMENTATION/AWA_INSTRUCTIONS/IL03407013Z.pdf
Motor starters and "Special Purpose Ratings" for the North American market	http://www.eaton.eu/ecm/groups/public/@pub/@europe/@electrical/documents/content/pct_3258146.pdf
Switchgear of Power Factor Correction Systems	http://www.moeller.net/binary/ver_techpapers/ver934en.pdf
X-Start - Modern Switching Installations Efficiently Fitted and Wired Securely	http://www.moeller.net/binary/ver_techpapers/ver938en.pdf
Mirror Contacts for Highly-Reliable Information Relating to Safety-Related Control Functions	http://www.moeller.net/binary/ver_techpapers/ver944en.pdf
Effect of the Cabel Capacitance of Long Control Cables on the Actuation of Contactors	http://www.moeller.net/binary/ver_techpapers/ver949en.pdf
Switchgear for Luminaires	http://www.moeller.net/binary/ver_techpapers/ver955en.pdf
Standard Compliant and Functionally Safe Engineering Design with Mechanical Auxiliary Contacts	http://www.moeller.net/binary/ver_techpapers/ver956en.pdf

The Interaction of Contactors with PLCs	http://www.moeller.net/binary/ver_techpapers/ver957en.pdf
Busbar Component Adapters for modern Industrial control panels	http://www.moeller.net/binary/ver_techpapers/ver960en.pdf

© 07/2022 by Eaton Industries GmbH