Hypra® IP 44 sockets and plugs metal, plastic, rubber, IP 44/55 Prisinter

LV 16 to 63 A and ELV 16 and 32 A

Conform to IEC 60309-1 and IEC 60309-2
IP 44 according to IEC 60529
IK 09: plastic and rubber
IK 10: metal according to IEC 62262
Self-extinguishing:
- 850°C (support of active parts) / 960 °C for Prinsinter)
- 650 °C: plastic housing conform to IEC 60695-2-10
- 50°C to + 100°C
(- 20°C for Prisinter)

Dimensions (p. 401 to 407)





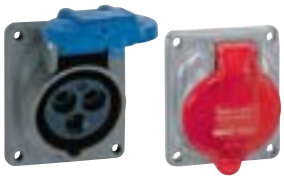





			FUNCTIONS									
			Prisinter(2)				Panel mounting sockets			Surface mounting sockets		Through wiring surface mounting sockets
			Panel mounting sockets		Surface mounting sockets		metal	plastic	with single fixing centres	metal	plastic	plastic
			metal	plastic	metal	plastic						
LV												
100 to 130 V~ 50/60 Hz	**16 A**	**2P+E**	-	519 10	-	519 10 + 520 49	-	519 20	519 19	-	519 20 + 520 29(1)	519 20 + 520 89
200 to 250 V~ 50/60 Hz	**16 A**	**2P+E**	520 12	520 02	520 12 + 520 59	520 02 + 520 49	520 32	520 22(1)	520 18(1)	520 32 + 520 39	520 22(1) + 520 29(1)	520 22(1) + 520 89
	32 A	**2P+E**	-	527 02	-	527 02 + 529 49	527 32	-	527 18	527 32 + 529 39	527 18 + 529 40	527 18 + 529 90
380 to 415 V~ 50/60 Hz	**16 A**	**3P+E**	522 13	522 03	522 13 + 520 59	522 03 + 520 49	522 33	522 23(1)	522 19(1)	522 33 + 522 39(1)	522 23(1) + 522 29(1)	522 23(1) + 522 89
		3P+N+E	522 14	522 04	522 14 + 529 59	522 04 + 522 49	522 34	522 24(1)	522 20	522 34 + 522 39(1)	522 24(1) + 522 29(1)	522 24(1) + 522 89
	32 A	**3P+E**	529 13	529 03	529 13 + 522 59	529 03 + 529 49	529 33	-	529 19	529 33 + 529 39	529 19 + 529 40	529 19 + 529 90
		3P+N+E	529 14	529 04	529 14 + 522 59	529 04 + 529 49	529 34	-	529 20	529 34 + 529 39	529 20 + 529 40	529 20 + 529 90
	63 A	**3P+E**	538 00	536 03	538 00 + 538 09	536 03 + 537 49	538 33	538 23	-	537 33	537 23	538 23 + 538 89
		3P+N+E	538 01	536 04	538 01 + 538 09	536 04 + 537 49	538 34	538 24	-	537 34	537 24	538 24 + 538 89
480 to 500 V~ 50/60 Hz	**16 A**	**3P+E**	-	-	-	-	-	523 20	523 19	-	523 20 + 522 29(1)	523 20 + 522 89
	32 A	**3P+E**	-	-	-	-	-	-	523 59	-	523 59 + 529 40	523 59 + 529 90
ELV												
20 to 25 V~ 50/60 Hz	**16 A**	**2P**	-	-	-	-	-	524 01(1)	-	-	524 01(1) + 524 19(1)	-
	32 A	**2P**	-	-	-	-	-	525 01	-	-	525 01 + 524 19(1)	-

Pack = 1 except (1) pack = 5
(2) Dust resistance IP may be increased by rubber push-button (on request) - IP 55 cover closed or connected - IP 44 connected

FUNCTIONS

Straight plugs			Angled plugs			Mobile sockets		Panel appliance inlets		Surface appliance inlets	
											
metal	plastic	rubber	metal	plastic	rubber	metal	plastic	metal	plastic	metal	plastic
-	519 40	-	-	-	-	519 80	-	-	519 70	-	519 70 + 520 79
521 42	520 42(1)	520 52(1)	520 72	520 62(1)	521 52	520 82(1)	520 92	521 62	521 72	521 62 + 520 69	521 72 + 520 79
-	527 42	527 52	527 72	527 62		527 82	527 92	528 62	528 72	528 62 + 529 69	528 72 + 529 79
521 43	522 43(1)	522 53(1)	522 73	522 63(1)	521 53(1)	522 83(1)	522 93(1)	521 63	521 73	521 63 + 522 69	521 73 + 522 79
521 44	522 44(1)	522 54	522 74	522 64	521 54	522 84	522 94	521 64	521 74	521 64 + 522 69	521 74 + 522 79
528 43	529 43(1)	529 53(1)	529 73	529 63	528 53	529 83	529 93(1)	528 63	528 73	528 63 + 529 69	528 73 + 529 79
528 44	529 44(1)	529 54	529 74	529 64	528 54	529 84	529 94	528 64	528 74	528 64 + 529 69	528 74 + 529 79
-	538 43	538 53	538 73	-	538 63	538 83	538 93	537 63	537 73	537 63 + 538 69	537 73 + 538 79
-	538 44	538 54	538 74	-	538 64	538 84	538 94	537 64	537 74	537 64 + 538 69	537 74 + 538 79
-	523 21	-	-	-	-	523 22	-	-	-	-	-
-	523 61	-	-	-	-	523 62	-	-	-	-	-
-	524 21(1)	-	-	-	524 41(1)	524 81	524 61	-	-	-	-
-	525 21	-	-	-	525 41	525 81	525 61	-	-	-	-



Special voltages and frequencies available on request

Please consult us

Legrand System

These products are part of industrial equipment > See p. 266-267

Hypra® IP 66/67-55 plastic - increased safety

LV 16 to 125 A

63 A and 125 A easy connection disconnection

Conform to IEC 60309-1 and IEC 60309-2
IP according to IEC 60529
IK 09: Plastic
Self-extinguishing: 850°C (support of active parts) / 650°C (plastic housing)

Dimensions (p. 402)

LV			FUNCTIONS									
			Panel mounting sockets		Surface mounting sockets	Through wiring surface mounting sockets	Straight plugs	Angled plugs	Mobile sockets	Surface appliance inlets	Straight panel appliance inlets	Socket with break isolatine switch
												
			inclined outlets	with single fixing centres								
200 to 250 V~ 50/60 Hz	16 A	2P+E	511 26[1]	511 46	511 26 + 520 29[1]	511 26 + 520 89	511 56[1]	511 06	511 76	511 86	-	-
	32 A	2P+E	-	530 46	530 46 + 529 40	530 46 + 529 90	530 56	530 06	530 76	530 86	-	-
380 to 415 V~ 50/60 Hz	16 A	3P+E	511 30	511 50	511 30 + 522 29[1]	511 30 + 522 89	511 60[1]	511 10	511 80	511 90	-	-
		3P+N+E	511 31	511 51	511 31 + 522 29[1]	511 31 + 522 89	511 61[1]	511 11	511 81	511 91	-	-
	32 A	3P+E	-	530 50	530 50 + 529 40	530 50 + 529 90	530 60	530 10	530 80	530 90	-	-
		3P+N+E	-	530 51	530 51 + 529 40	530 51 + 529 90	530 61	530 11	530 81	530 91	-	-
	63 A	3P+E	594 27	-	594 37	594 27 + 538 89	594 47	-	594 87	-	594 77[2]	-
		3P+N+E	594 28	-	594 38	594 28 + 538 89	594 48	-	594 88	-	594 78[2]	-
	125 A	3P+E	595 12	-	595 02	-	595 22	-	595 32	-	595 42	591 14
		3P+N+E	595 13	-	595 03	-	595 23	-	595 33	-	595 43	591 15

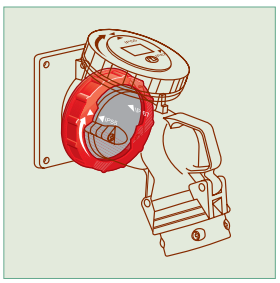

When connected[3], IP 55 guaranted with the cover closed

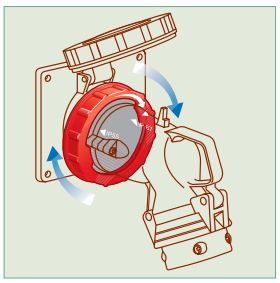

IP 66/67 obtained with the ring locked



When not connected IP 55 automatically assured when cover is closed IP 66/67 obtained with the ring locked

Pack = 1 except (1) pack = 5
(2) Can be fixed on Cat.No 538 89 to obtain a straight surface mounting appliance inlet
(3) With a pair of Hypra IP 66/67-55 products

Red catalogue numbers: New products

Hypra® IP 44 and IP 44/55 Prisinter™
LV 16 to 125 A

■ Prisinter - panel mounting sockets - LV 16-32-63 A (p. 398)

Terminal connection (max.)
BT 16 A : rigid - 1 x 4 mm²
BT 32 A : rigid - 1 x 10 mm²
BT 63 A : rigid - 1 x 25 mm²
Prisinter sockets 32 A : flexible - 1 x 6 mm²
Prisinter sockets 63 A : flexible - 1 x 16 mm²
Conform to EN 60309-1, NF EN 60309-2, IEC 60309-1 and IEC 60309-2
IK 09 : plastic and rubber
IK 10 : metal according to EN 62262 et IEC 62262
Self-extinguishing :
850 °C support of active parts, 950 °C for Prisinter
650 °C plastic honsing
- 50 °C à + 100 °C (- 20 °C pour les Prisinter)
Icc 10 kA according to EN 60309-1 and IEC 60309-1
Dust resistance IP may be increased by rubber push-button (on request)

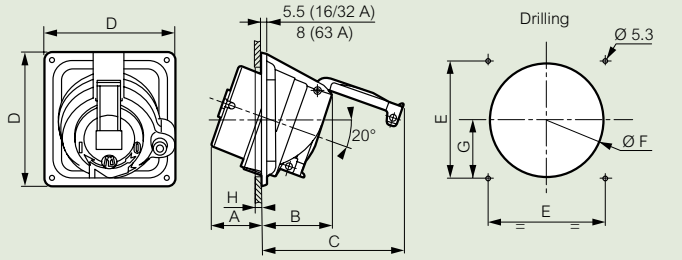

	Material	Weight (kg)	A	B	C	D	E	F min	F max	G	H max
16 A											
2P+E	Plastic	0.42	46	70	132	115	100	92	98	46	6 to 10
	Metal	1.25									
3P+E	Plastic	0.48	46	70	138	115	100	92	96	46	6 to 10
	Metal	1.33									
3P+N+E	Plastic	0.57	46	75	156	125	110	102	106	51.5	7
	Metal	1.47									
32 A											
2P+E	Plastic	0.57	54	77	153	143	125	115	122	58.5	10 to 20
	Metal	1.47									
3P+E	Plastic	0.61	54	77	153	143	125	115	122	58.5	10 to 20
	Metal	1.5									
3P+N+E	Plastic	0.65	55	79	169	143	125	119	122	58.5	9 to 13
	Metal	1.8									
63 A											
2P+E	Plastic	0.87	55	99	205	143	125	120	122	59.5	10 to 20
	Metal	1.5									
3P+E	Plastic	0.95	55	99	205	143	125	120	122	59.5	10 to 20
	Metal	1.85									
3P+N+E	Plastic	0.98	55	99	205	143	125	120	122	59.5	10 to 20
	Metal	2.2									

Breaking capacity 3 x 400 V~ according to IEC 60947-1-3

Category	16 A	32 A	63 A	Category	125 A	
AC 1	16 A	32 A	63 A	**AC 22 AC 23**	400 V	70 kW
AC 23	8.4 kW	16.8 kW	33 kW		500 V	87 kW
AC 3					600 V	120 kW

■ Reversible box for Prisinter sockets

LV 16 A (p. 398)

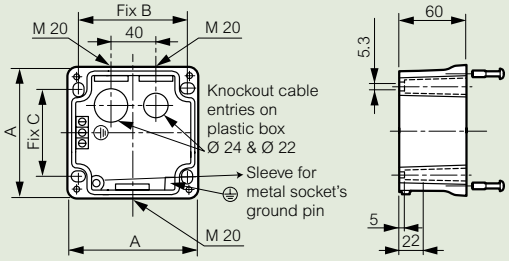

3 entries among which
2 entries M20 sealed with B20P blanking plug for auxiliary contact use
Fitted with 2 connected earth terminals and 1 outside terminal on metal box

	Material	Weight (kg)	A (mm)	B (mm)	C (mm)
2P+E	Plastic	0.14	115	97	78
3P+E	Metal	0.8			
3P+N+E	Plastic	0.16	125	107	88
	Metal	0.9			

LV 32 A (p. 398)

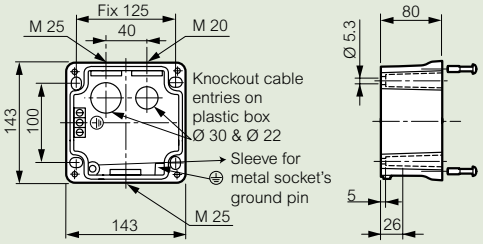

3 entries among which
1 M20 sealed with B20P blanking plug for auxiliary contact
1 M25 sealed with B25P blanking plug
Fitted with 2 connected earth terminals and 1 outside terminal on metal box

LV 63 A (p. 398)

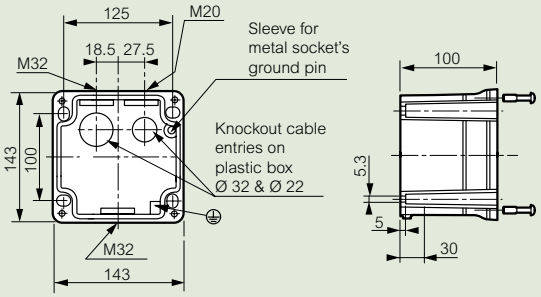

3 entries among which
1 M20 sealed with B20P blanking plug for auxiliary contact
1 M32 sealed with B32P blanking plug
Fitted with 1 outside earth terminal on metal box



Dust resistance IP can be increased by a rubber push-button

on special request

Hypra® IP 44, IP 66/67-55 panel mounting sockets

LV 16 to 125 A and ELV 16 and 32 A

■ Dimensions

IP 44 - LV 16 to 63 A (p. 398) and ELV 16 and 32 A

External screws in stainless steel - Nickel-plated contacts
Enable realization of surface mounting sockets, associated with reversible box

Terminal connection (max.):
- LV 16 A: 1 x 4 mm² rigid
- LV 32 A: 1 x 10 mm² rigid
- LV 63 A: 1 x 25 mm² rigid
- ELV: 1 x 10 mm² rigid

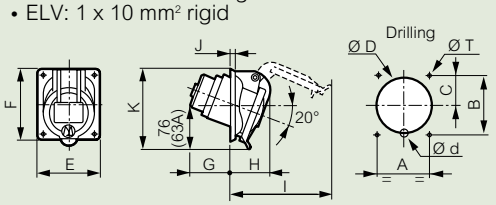

	Material	Weight (kg)	Drilling						Dimensions						
			A	B	C	ØD	Ød	ØT	E	F	G	H	I	J	K
LV - 16 A															
2P+E	Plastic	0.110	52	60	28	55	14.5	4.2	64	72	41	40	94	5.5	78.5
	Metal	0.340													
3P+E	Plastic	0.140	60	70	31	63.5	14.5	5.2	74	84	44	40	98	5.5	88
	Metal	0.405													
3P+N+E	Plastic	0.165	60	70	33	70.6	-	5.2	80	84	44	44	110	5.5	93
	Metal	0.450													
LV - 32 A															
2P+E/ 3P+E	Metal	0.605	70	80	38	76.2	10	5.2	84	94	50	53	120	5.5	103
3P+N+E	Metal	0.660	70	80	38	76.2	10	5.2	84	94	52	56	124	5.5	107
LV - 63 A															
2P+E	Plastic	0.600	77	85	-	92	-	6.5	106	106	98	70	160	6	129
	Metal	0.950													
3P+E	Plastic	0.640													
	Metal	1.000													
3P+N+E	Plastic	0.700													
	Metal	1.200													
ELV-16/32 A															
2P	Plastic	0.120	52	60	30	55	-	4.2	64	72	33	47	94	5.5	78.5

IP 44 - LV 16 and 32 A with single fixing centres (p. 398)

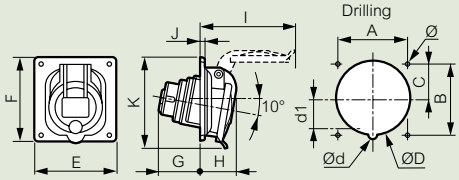

	Weight (kg)	A	B	C	ØD	Ød	d1	E	F	G	H	I	J	K	Ø
LV 16 A															
2P+E	0.110	70	70	35	76.2	/	/	84	84	37	36	89	4.5	88	4.2
3P+E	0.140	70	70	35	76.2	/	/	84	84	43	36	97	4.5	89	4.2
3P+N+E	0.165	70	70	35	76.2	/	/	84	84	43	37	106	4.5	91	4.2
LV - 32 A															
2P+E/ 3P+E	0.220	70	70	35	76.2	–	–	84	94	54	45	117	4.5	100	4.2
3P+N+E	0.255	70	70	35	76.2	8	36	84	94	54	46	125	4.5	102	4.2

IP 66/67-55 - LV 16 A (p. 400)

External screws in stainless steel - Nickel-plated contacts
Terminal connection (max.): 1 x 4 mm² rigid or flexible

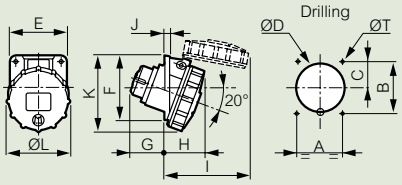

	Weight (kg)	Drilling					Dimensions							
		A	B	C	ØD	ØT	E	F	G	H	I	J	K	L
LV - 16 A														
2P+E	0.140	52	60	33	55	4.2	64	72	40	45	91	5.5	87	72.5
3P+E	0.165	60	70	39	63.5	5.2	74	84	41	48	102	5.5	96	81
3P+N+E	0.195	60	70	37	70.6	5.2	80	84	42	50	106	5.5	96	86.5

IP 66/67-55 - LV 63 and 125 A (p. 400)

Terminal connection (max.):
- 63 A: 1 x 25 mm² rigid
- 125 A: 1 x 70 mm² rigid

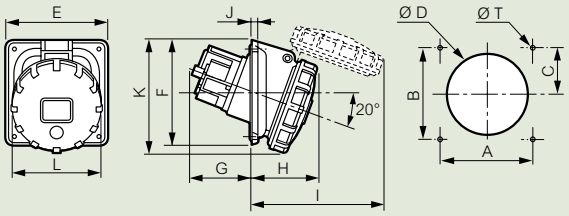

	Weight (kg)	Drilling					Dimensions							
		A	B	C	ØD	ØT	E	F	G	H	I	J	K	ØL
LV - 63 A														
2P+E	0.680													
3P+E	0.710	77	85	42.5	92	6.5	106	106	98	79	158	6	127	113.5
3P+N+E	0.770													
LV - 125 A														
3P+E	1.400	124	124	62	120	6.5	146	146	84	93	182	8	157	131
3P+N+E	1.550													

IP 66/67-55 - LV 16 and 32 A with single fixing centres (p. 400)

Terminal connection (max.):
- 16 A: 1 x 4 mm² rigid
- 32 A: 1 x 10 mm² rigid

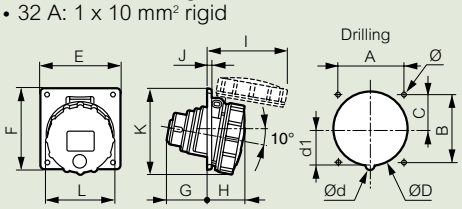

	Weight (kg)	Drilling							Dimensions (mm)							
		A	B	C	ØD	Ød	d1	Ø	E	F	G	H	I	J	K	ØL
LV 16 A																
2P+E	0.140	70	70	35	76.2	-	-	4.2	84	84	42	39	83	4.5	90	72.5
3P+E	0.165	70	70	35	76.2	-	-	4.2	84	84	43	41	98	4.5	93	81
3P+N+E	0.195	70	70	35	76.2	-	-	4.2	84	84	43	41	99	4.5	91	86.5
LV 32 A																
2P+E	0.240	70	70	35	76.2	-	-	4.2	84	94	54	50	113	4.5	101	94.5
3P+E	0.240	70	70	35	76.2	-	-	4.2	84	94	54	50	113	4.5	101	94.5
3P+N+E	0.270	70	70	35	76.2	8	36	4.2	84	94	54	51	120	4.5	103	101

For more information, please consult e-catalogue www.legrandelectric.com

Hypra® IP 44, IP 66/67-55 surface mounting sockets reversible box

LV 16 to 63 A and ELV 16 and 32 A

■ Dimensions

IP 44 ELV 16 and 32 A - IP 44, IP 66/67-55 - LV 16 A (p. 398, 400)

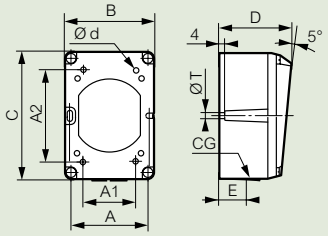

Fix A1 and A2:
Blind optional fixing points
Metal boxes fitted with
- 2 connected earth terminals and 1 outside terminal
- 1 sleeve for metal socket's ground pin

Surface mounting sockets → Panel mounting sockets ↓	Material	Weight (kg)	Drilling					Dimensions				CG cable gland
			A1	A2	Ød	A	ØT	B	C	D	E	
IP 44 - ELV 16/32 A												
2P+E	Plastic	0.115	51	68	4.2	64	5.3	74	106	58	20	M 25
IP 44 and IP 66/67-55 - LV 16 A												
2P+E	Plastic	0.115	51	68	4.2	64	5.3	74	106	58	20	M 20
	Metal	0.400										
3P+E/ 3P+N+E	Plastic	0.160	68	68	4.2	85	5.3	96	122	60	22	M 20
	Metal	0.520										

IP 44, IP 66/67-55 - LV 32 A (p. 398, 400)

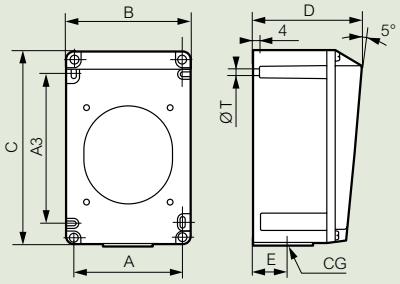

Blind optional fixing points
Metal boxes fitted with
- 2 connected earth terminals and 1 outside terminal
- 1 sleeve for metal socket's ground pin

Surface mounting sockets → Panel mounting sockets ↓	Material	Weight (kg)	Drilling			Dimensions				CG cable gland
			A	A3	ØT	B	C	D	E	
IP 44 and IP 66/67-55 - LV 32 A										
2P+E/ 3P+E/ 3P+N+E	Plastic	0.340	90	125	5.3	102	162	90	26	M 25
	Metal	0.910								

Hypra® IP 44, IP66/67-55 and IP 66/67 through wiring surface mounting sockets

■ Dimensions

IP 44 - LV 16 to 63 A, IP 66/67-55 - LV 16 and 32 A, IP 66/67 - LV 63 A (p. 398, 400)

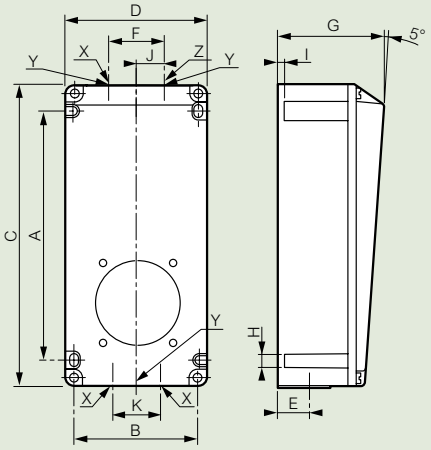

Plastic boxes fitted with 2 connected earth terminals
Metal boxes fitted with
- 2 connected earth (16/32 A) terminals and 1 outside terminal
- 1 sleeve for metal socket's ground pin
- 3 connected earth (63 A) terminals

Surface mounting sockets → Panel mounting sockets ↓	Material	Weight (kg)	Drilling			Dimensions											
			A	B	H	C	D	E	F	G	I	J	K	X	Y	Z
16 A																	
2P+E	Plastic	0.330	145	74	5.3	182	86	22	34	75	4	-	-	-	M 20	
	Metal	0.830															
3P+E/ 3P+N+E	Plastic	0.440	175	88	5.3	212	100	22	40	77	4	-	-	-	M 20	-
	Metal	0.980															
32 A																	
2P+E/ 3P+E/ 3P+N+E	Plastic	0.670	234	117	5.3	270	130	30	50	120	4	-	-	-	M 25	-
	Metal	1.730															
63 A (Panel appliance inlets 63 A can be fixed)																	
2P+E/ 3P+E/ 3P+N+E	Plastic	2.000	260	152	6.3	300	170	40	-	150	8	50	70	M 32	-	M 20
	Metal	4.300		157												

Hypra® IP 44 and IP 66/67-55 surface mounting sockets

External screws in stainless steel - Nickel-plated contacts

IP 44 - LV 63 A (p. 398)

Terminal connection: 1 x 25 mm² rigid max.

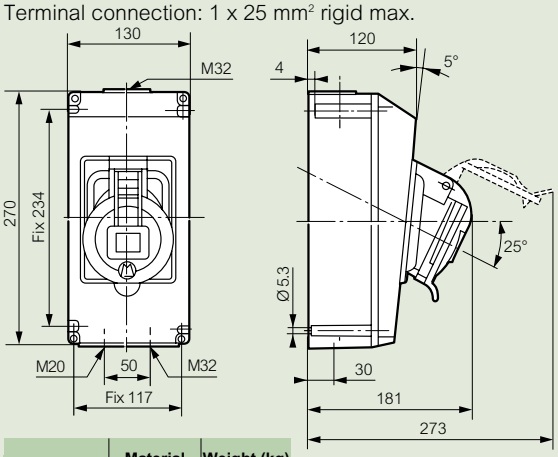

	Material	Weight (kg)
3P+E	Plastic	1.45
	Metal	4.95
3P+N+E	Plastic	1.5
	Metal	5

IP 66/67-55 - LV 63 A (p. 400)

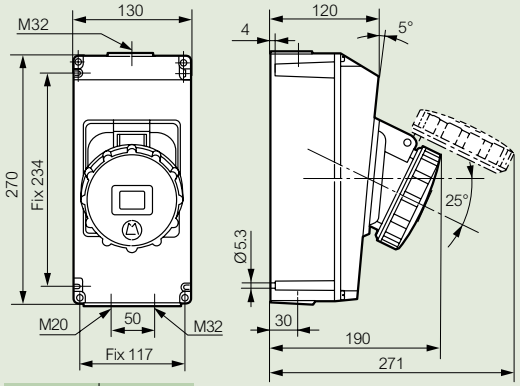

	Weight (kg)
2P+E	1.500
3P+E	1.550
3P+N+E	1.600

IP 66/67-55 - LV 125 A (p. 400)

Terminal connection: 1 x 70 mm² rigid max.

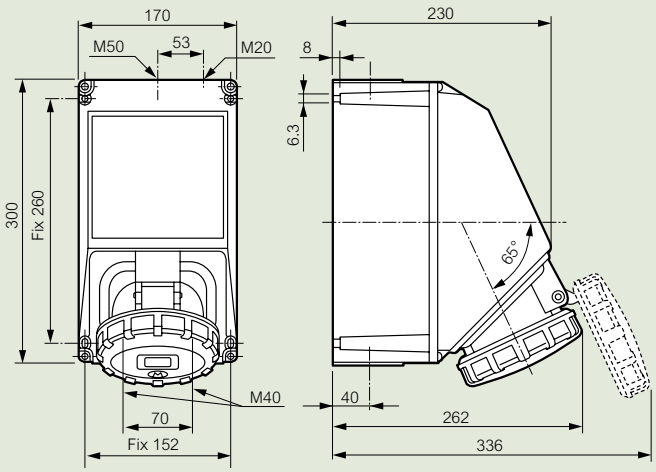

	Weight (kg)
3P+E	3.5
3P+N+E	3.7

Hypra® IP 44 - panel appliance inlets and reversible boxes

External screws in stainless steel - Nickel-plated contacts

■ Panel appliance inlets (inclined)

IP 44: LV 16, 32 and 63 A (p. 398)

Terminal connections:
- 16 A: 1 x 2.5 mm² max. rigid
- 32 A: 1 x 6 mm² max. rigid
- 63 A: 1 x 25 mm² max. rigid

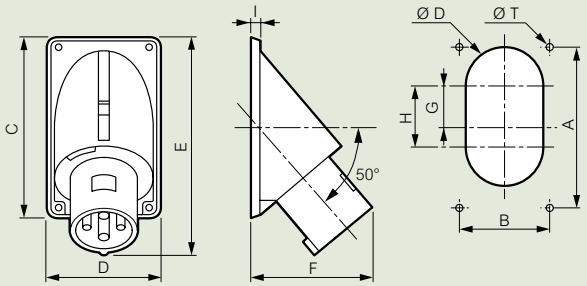

	Material	Weight (kg)	Drilling					Dimensions					
			A	B	ØT	ØD	G	H	C	D	E	F	I
LV - 16 A													
2P+E	Plastic	0.140	94	62	4.5	40	-	-	104	72	121	78	6
	Metal	0.530											
3P+E	Plastic	0.160	109	83	4.5	40	-	-	120	94	135	86	6
	Metal	0.630											
3P+N+E	Plastic	0.190									139		
	Metal	0.690											
LV - 32 A													
2P+E/ 3P+E	Plastic	0.280	149	90	5.5	40	-	-	160	101	176	111	6
	Metal	0.950											
3P+N+E	Plastic	0.320									174	108	
	Metal	1.000											
LV - 63 A													
2P+E	Plastic	0.560	163	93	6.5	80	42	62	183	113	221	120	8
3P+E	Plastic	0.630											
	Metal	2.230											
3P+N+E	Plastic	0.690											
	Metal	2.450											

■ Reversible boxes for surface appliance inlets

LV 16 A (p. 399)

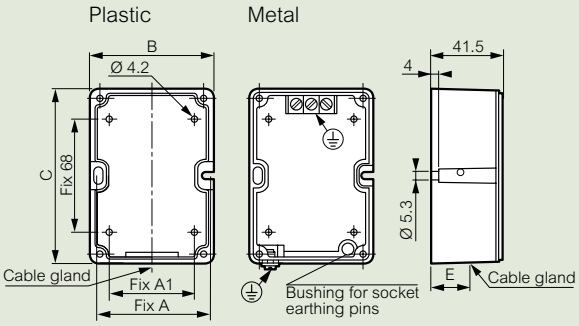

Fix A1 and Fix 68 :
Blind optional fixing points

	Material	Weight (kg)	A	A1	B	C	E	Cable gland
2P+E	Plastic	0.085	64	51	74	106	20	M20
	Metal	0.250					22	
3P+E	Plastic	0.110	85	68	96	122	22	M20
3P+N+E	Metal	0.360						

Hypra® IP 44 and IP 66/67-55 - appliance inlets and reversible boxes

LV 32 A (p. 399)

Fitted with 2 connected earth terminals and 1 outside terminal on metal box

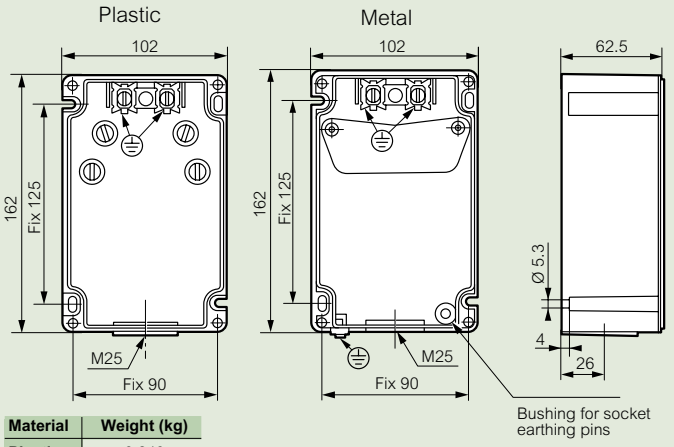

Material	Weight (kg)
Plastic	0.240
Metal	0.650

LV 63 A (p. 399)

Fitted with 2 connected earth terminals and 1 outside terminal on metal box

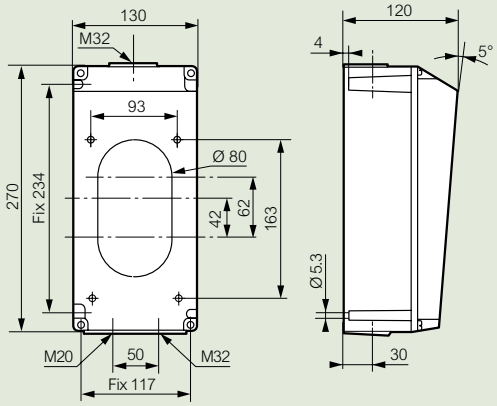

Material	Weight (kg)
Plastic	0.67
Metal	1.73

■ Surface mounting appliance inlets

IP 66/67-55 - LV 16 and 32 A (p. 400)

Terminal connections:
- 16 A: 1 x 2.5 mm² max. rigid
- 32 A: 1 x 6 mm² max. rigid

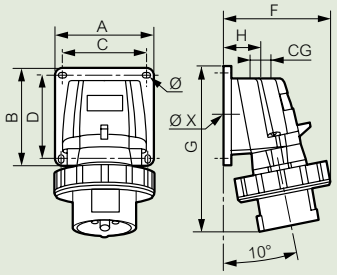

	Weight	A/B	C/D	F	G	H	CG cable gland	Ø	ØX
16 A									
2P + E	0.188	84	72	87	126	34	M 20	4.3	17
3P + E	0.257			95	134				
3P+N+ E	0.297			100	141				
32 A									
2P + E	0.370	110	98	107	168	39	M 25	5.3	24
3P + E									
3P+N+ E	0.413			113					

Hypra® IP 66/67-55 - appliance inlets and sockets with break isolating switch

■ Panel mounting appliance inlets

External screws in stainless steel - Nickel-plated contacts

IP 66/67-55 - 63 A (p. 400)

Can be fixed on box Cat.No 538 89 (p. 398)
Terminal connection: 1 x 16 mm² max. rigid

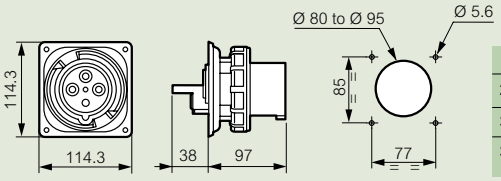

	Weight (kg)
2P+E	0.490
3P+E	0.548
3P+N+E	0.610

IP 66/67-55 - 125 A (p. 400)

Terminal connection: 1 x 50 mm² max. rigid

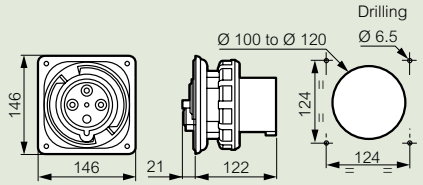

	Weight (kg)
3P+E	1.00
3P+N+E	1.15

■ Socket with break isolating switch

IP 66/67-55 - LV 125 A (p. 400)

IP 67 according to IEC and EN 60529
Icc 10 kA according to IEC and EN 60309-1
Panel mounting sockets: IK 09 according to IEC and EN 62262
External screws in stainless steel

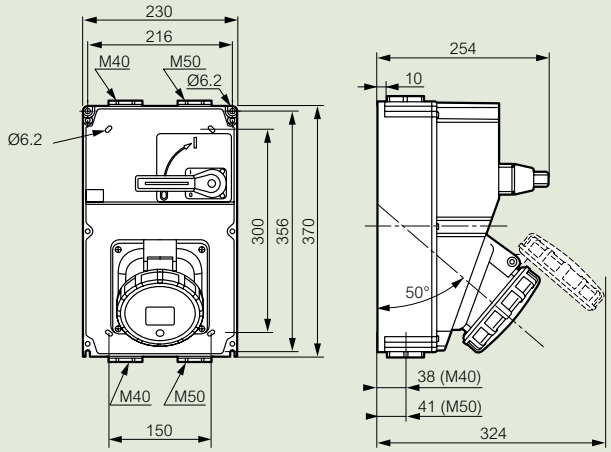

Hypra® IP 44 and IP66/67-55 straight and angled plugs

LV 16 to 125 A and ELV 16 and 32 A

■ Characteristics

External screws in stainless steel - Nickel-plated contacts
Terminal connection:
- LV 16 A: 1 x 2.5 mm² max. flexible
- LV 32 A: 1 x 6 mm² max. flexible
- LV 63 A: 1 x 16 mm² max. flexible
- LV 125 A: 1 x 50 mm² max. flexible
- ELV 16/32 A: 1 x 10 mm² max. flexible

■ Dimensions

Straight plugs IP 44

LV and ELV 16/32 A (p. 399)

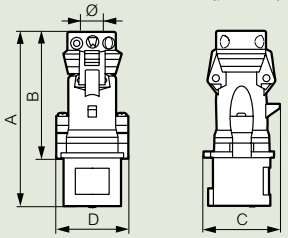

LV 63 A (p. 399)

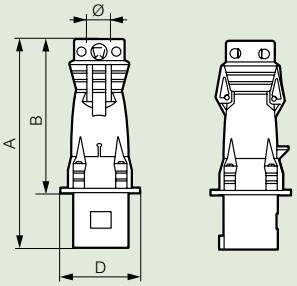

	Material	Weight (kg)	Dimensions (mm) A	B	C	D	Ø clamping and grip
LV 16 A							
2P+E	Plastic	0.150	135	100	57	55	8 to 15
	Metal	0.365					
	Rubber	0.205	135	100	60	61	8 to 15
3P+E	Plastic	0.175	139	103	65	60	8 to 15
	Metal	0.425					
	Rubber	0.260	139	103	68	66	8 to 15
3P+N+E	Plastic	0.210	154	118	73	66	10 to 18
	Metal	0.535					
	Rubber	0.300	154	118	77	72	10 to 18
LV 32 A							
2P+E	Plastic	0.260	164	119	78	70,5	10 to 18
	Metal	0.645					
	Rubber	0.360	164	119	81	76,5	10 to 18
3P+E	Plastic	0.260	164	119	78	70,5	12 to 22
	Metal	0.645					
	Rubber	0.360	164	119	81	76,5	12 to 22
3P+N+E	Plastic	0.300	170	125	86	77	12 to 22
	Metal	0.685					
	Rubber	0.415	170	125	89	83	12 to 22
LV 63 A							
2P+E	Plastic	0.580	255	188.5	-	102	16 to 26
	Rubber	0.900	255	188.5	-	110	16 to 26
3P+E	Plastic	0.640	255	188.5	-	102	18.5 to 29
	Rubber	0.980	255	188.5	-	110	18.5 to 29
3P+N+E	Plastic	0.700	255	188.5	-	102	20.5 to 32
	Rubber	1.050	255	188.5	-	110	20.5 to 32
ELV 16/32 A							
2P	Plastic	0.180	142	107	62	55	8.5 to 22

Straight plugs IP 66/67-55

LV 16/32 A (p. 400)

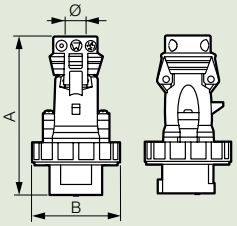

	Weight (kg)	Dimensions (mm) A	B	Ø clamping and grip
16 A				
2P+E	0.165	135	72.5	8 to 15
3P+E	0.195	139	81	8 to 15
3P+N+E	0.220	154	86.5	10 to 18
32 A				
2P+E	0.280	164	94.5	10 to 18
3P+E	0.280	164	94.5	12 to 22
3P+N+E	0.325	170	101	12 to 22

Straight plugs IP 66/67-55

LV 63 A (p. 400)

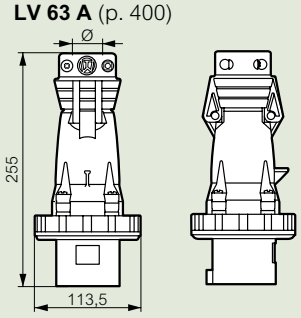

	Weight (kg)	Ø clamping and grip
2P+E	0.620	16 to 26
3P+E	0.680	18.5 to 29
3P+N+E	0.750	20.5 to 32

LV 125 A (p. 400)

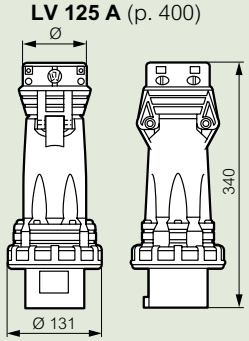

	Weight (kg)	Ø clamping and grip
3P+E	1.5	24 to 48
3P+N+E	1.7	28 to 48

Angled plugs IP 44

LV and ELV 16 and 32 A (p. 399)

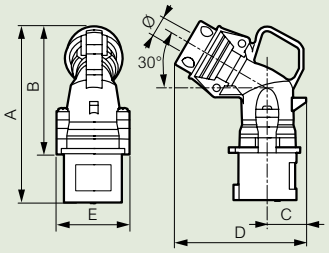

LV 63 A (p. 399)

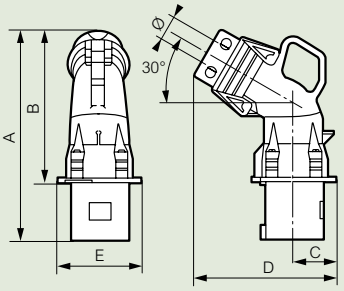

	Material	Weight (kg)	Dimensions (mm) A	B	C	D	E	Ø clamping and grip
LV 16 A								
2P+E	Plastic	0.145	136	100	29.5	100	55	8 to 15
	Metal	0.395						
	Rubber	0.230	136	100	29.5	100	61	8 to 15
3P+E	Plastic	0.185	141	105	33.5	105	60	8 to 15
	Metal	0.455						
	Rubber	0.290	141	105	33.5	105	66	8 to 15
3P+N+E	Plastic	0.220	150	114	37.5	114	66	10 to 18
	Metal	0.585						
	Rubber	0.330	150	114	37.5	114	72	10 to 18
LV 32 A								
2P+E	Plastic	0.275	161	116	39.5	116	70.5	10 to 18
	Metal	0.745						
	Rubber	0.390	161	116	39.5	116	76.5	10 to 18
3P+E	Plastic	0.275	161	116	39.5	116	70.5	12 to 22
	Metal	0.745						
	Rubber	0.390	161	116	39.5	116	76.5	12 to 22
3P+N+E	Plastic	0.320	167	122	44.5	122	77	12 to 22
	Metal	0.790						
	Rubber	0.435	167	122	44.5	122	83	12 to 22
LV 63 A								
2P+E	Metal	0.100	243.5	177	51	168	102	16 to 26
3P+E	Metal	1.150	243.5	177	51	168	102	18.5 to 29
	Rubber	1.030	243.5	177	51	168	110	18.5 to 29
3P+N+E	Metal	1.250	243.5	177	51	168	102	20.5 to 32
	Rubber	1.100	243.5	177	51	168	110	20.5 to 32
ELV 16/32 A								
2P	Rubber	0.250	131	107	30	107	61	8.5 to 22

Angled plugs IP 66/67-55

LV 16-32 A - plastic (p. 400)

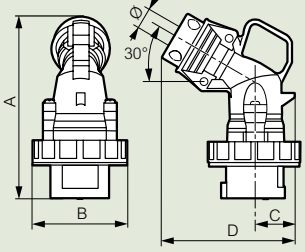

	Weight (kg)	Dimensions (mm) A	B	C	D	Ø clamping and grip
16 A						
2P+E	0.165	136	72.5	29.5	100	8 to 15
3P+E	0.195	141	81	33.5	105	8 to 15
3P+N+E	0.220	150	86.5	37.5	114	10 to 18
32 A						
2P+E	0.280	161	94.5	39.5	116	10 to 18
3P+E	0.280	161	94.5	39.5	116	12 to 22
3P+N+E	0.325	167	101	44.5	122	12 to 22

Hypra® IP 44, IP 66/67-55 mobile sockets

■ Characteristics

External screws in stainless steel - Nickel-plated contacts
Icc 10 kA according to IEC 60309-1

■ Dimensions

Mobile sockets IP 44 - **LV and ELV 16 - 32 A** (p. 399)
Terminal connections:
- LV 16 A: 1 x 2.5 mm² max. flexible
- LV 32 A: 1 x 6 mm² max. flexible
- ELV 16/32 A: 1 x 10 mm² max. flexible

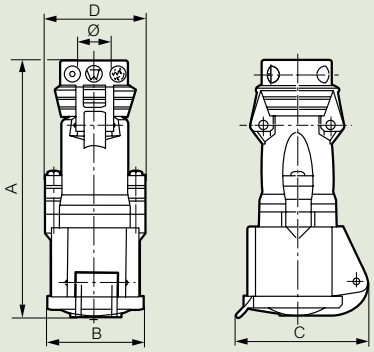

LV 63 A (p. 399)
Terminal connection: 1 x 16 mm² max. flexible

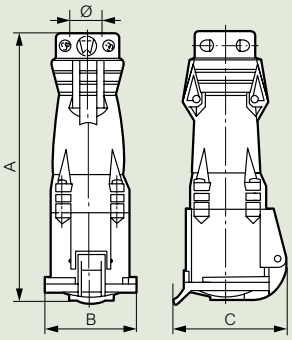

	Material	Weight (kg)	Dimensions (mm) A	B	C	D	Ø clamping and grip
LV 16 A							
2P+E	Plastic	0.170	147	54.5	74	55	8 to 15
	Rubber	0.250	147	58	74	61	8 to 15
3P+E	Plastic	0.200	151	61.5	81	60	8 to 15
	Rubber	0.285	151	65	81	66	8 to 15
3P+N+E	Plastic	0.245	172	69.5	90	66	10 to 18
	Rubber	0.335	172	72.5	90	72	10 to 18
LV 32 A							
2P+E	Plastic	0.300	177	71	93	70.5	10 to 18
	Rubber	0.400	177	74.5	93	76.5	10 to 18
3P+E	Plastic	0.300	177	71	93	70.5	12 to 22
	Rubber	0.400	177	74.5	93	76.5	12 to 22
3P+N+E	Plastic	0.350	183	77.5	100	77	12 to 22
	Rubber	0.475	183	80.5	100	83	12 to 22
LV 63 A							
2P+E	Plastic	0.700	273	96	119	-	16 to 26
	Rubber	1.200	273	110	124	-	16 to 26
3P+E	Plastic	0.770	273	96	119	-	18.5 to 29
	Rubber	1.300	273	110	124	-	18.5 to 29
3P+N+E	Plastic	0.830	273	96	119	-	20.5 to 32
	Rubber	1.400	273	110	124	-	20.5 to 32
ELV 16/32 A							
2P / 3P	Plastic	0.190	148	54.5	74	55	8.5 to 22
2P	Rubber	0.240	148	58	74	61	8.5 to 22

Mobile sockets IP 66/67-55 (p. 400)

LV 16 - 32 A
Terminal connections:
- LV 16 A: 1 x 2.5 mm² max. flexible
- LV 32 A: 1 x 6 mm² max. flexible

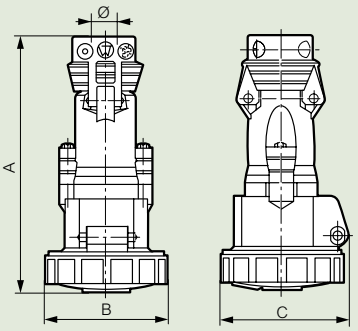

LV 63 A
Terminal connection: 1 x 16 mm² max. flexible

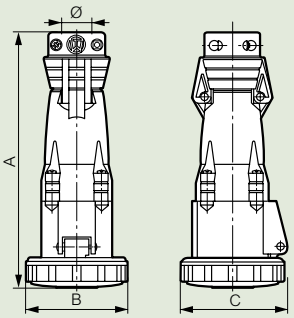

	Material	Weight (kg)	Dimensions A	B	C	Ø clamping and grip
LV 16 A						
2P+E	Plastic	0.180	150	72.5	75.5	8 to 15
3P+E	Plastic	0.215	154	81	86	8 to 15
3P+N+E	Plastic	0.275	169	86.5	89	10 to 18
LV 32 A						
2P+E	Plastic	0.320	179	94.5	99	10 to 18
3P+E	Plastic	0.320	179	94.5	99	12 to 22
3P+N+E	Plastic	0.375	185	101	105	12 to 22
LV 63 A						
2P+E	Plastic	0.780	278	113.5	119	16 to 26
3P+E	Plastic	0.850	278	113.5	119	18.5 to 29
3P+N+E	Plastic	0.910	278	113.5	119	20.5 to 32

LV 125 A (p. 400)
Terminal connection: 1 x 50 mm² max. flexible

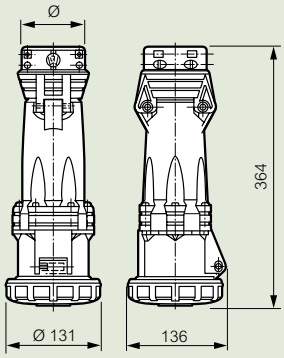

	Weight (kg)	Ø clamping and grip
125 A		
3P+E	1.8	24 to 48
3P+N+E	2.0	28 to 48

Hypra® IP 66/67-55

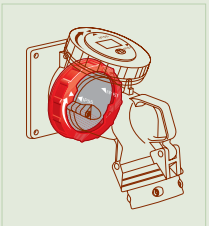

When connected(1), IP 55 guaranted with the cover closed

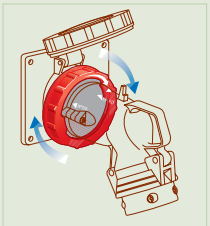

IP 66/67 obtained with the ring locked



When not connected IP 55 automatically assured when cover is closed IP 66/67 obtained with the ring locked

(1) With a pair of IP 66/67-55 products