8LB6BP05

FIXING BASE FOR LIGHT MODULES. Ø62MM, FOR Ø22MM HOLE TYPE, PLASTIC, BLACK COLOUR



Product designation		Fixing bases for light signal beacons Ø62mm/2.44"
Product type designation		8LB6BP05
General characteristics		
Diameter	mm - inch	62 / 2.44
Colour		Black
Material		Plastic
Mechanical features		
Weight	g	40
Dimensions		

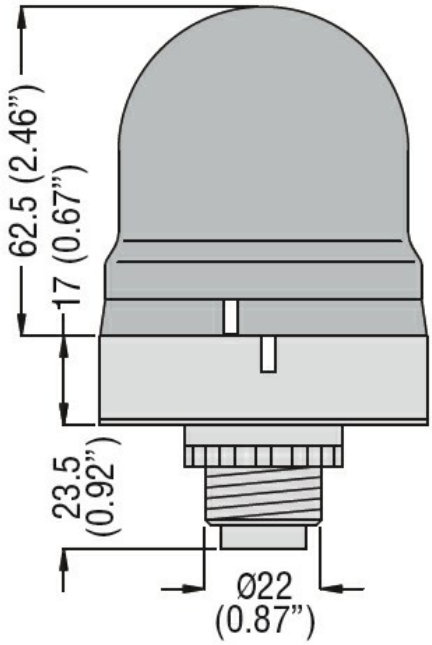

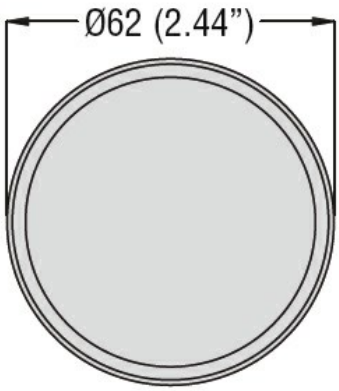

Certifications and compliance

Compliance

The characteristics described in this document are subject to updates or modifications at any time. The descriptions, technical and functional information, illustrations and instructions in this brochure are purely illustrative, and are consequently not contractually binding

8LB6BP05

FIXING BASE FOR LIGHT MODULES. Ø62MM, FOR Ø22MM HOLE TYPE, PLASTIC, BLACK COLOUR

/

Certificates

/

ETIM classification

ETIM 8.0	EC001154 - Stand for signal tower without tube

The characteristics described in this document are subject to updates or modifications at any time. The descriptions, technical and functional information, illustrations and instructions in this brochure are purely illustrative, and are consequently not contractually binding