E40545

Gasket

SEAL RING FKM DN80

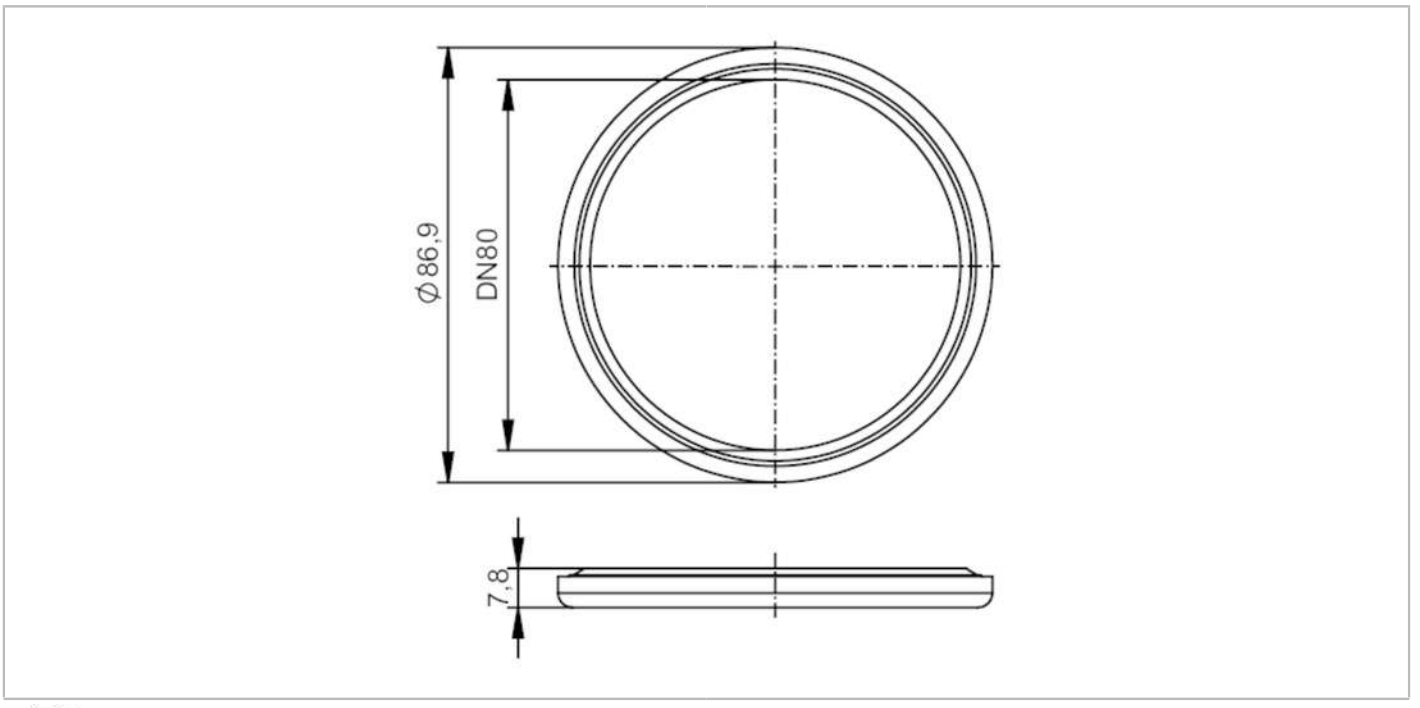

EC 1935/2004

Application		
Design		for volumetric flow meters SMF
Application		food and beverage industry; hygienic systems
Mechanical data		
Weight	[g]	36.8
Materials		FKM
Nominal diameter		DN80 (3“)
Remarks		
Pack quantity		2 pcs.