W2E200-HH86-01

AC axial compact fan

sickle-shaped blades (S series)

ebm-papst Mulfingen GmbH & Co. KG
Bachmühle 2 · D-74673 Mulfingen
Phone +49 7938 81-0
Fax +49 7938 81-110
info1@de.ebmpapst.com
www.ebmpapst.com

Limited partnership · Headquarters Mulfingen
Amtsgericht (court of registration) Stuttgart · HRA 590344

General partner Elektrobau Mulfingen GmbH · Headquarters Mulfingen
Amtsgericht (court of registration) Stuttgart · HRB 590142

Nominal data

Type	**W2E200-HH86-01**
Motor	**M2E068-BF**

Phase		1~	1~
Nominal voltage	VAC	115	115
Frequency	Hz	50	60
Method of obtaining data		fa	fa
Valid for approval/standard		CE	CE
Speed (rpm)	min^{-1}	2550	2800
Power consumption	W	64	80
Current draw	A	0.58	0.70
Capacitor	µF	5	5
Capacitor voltage	VDB	220	220
Capacitor standard		P0 (CE)	P0 (CE)
Max. back pressure	Pa	100	120
Max. back pressure	inH2O	0.4	0.48
Min. ambient temperature	°C	-25	-25
Max. ambient temperature	°C	60	65
Starting current	A	0.98	0.98

ml = Max. load · me = Max. efficiency · fa = Free air · cs = Customer specification · ce = Customer equipment
Subject to change

AC axial compact fan

sickle-shaped blades (S series)

Technical description

Weight	2.1 kg
Fan size	200 mm
Rotor surface	Painted black
Blade material	Sheet steel, painted black
Fan housing material	Die-cast aluminum
Number of blades	9
Airflow direction	"V"
Direction of rotation	Counterclockwise, viewed toward rotor
Degree of protection	IP44; installation- and position-dependent
Insulation class	"B"
Moisture (F) / Environmental (H) protection class	H0 - dry environment
Max. permitted ambient temp. for motor (transport/storage)	+ 80 °C
Min. permitted ambient temp. for motor (transport/storage)	- 40 °C
Installation position	Any
Condensation drainage holes	None
Mode	S1
Motor bearing	Ball bearing
Touch current according to IEC 60990 (measuring circuit Fig. 4, TN system)	< 0.75 mA
Electrical hookup	Via terminals, capacitor connected
Motor protection	Thermal overload protector (TOP) internally connected
With cable	Variable
Protection class	I (with customer connection of protective earth)
Motor capacitor according to EN 60252-1 in safety protection class	P0/S0
Conformity with standards	CE
Approval	UL 507; CSA C22.2 No. 113; VDE; EAC; CCC

ebm-papst Mulfingen GmbH & Co. KG · Bachmühle 2 · D-74673 Mulfingen · Phone +49 (0) 7938 81-0 · Fax +49 (0) 7938 81-110 · info1@de.ebmpapst.com · www.ebmpapst.com

AC axial compact fan

sickle-shaped blades (S series)

Product drawing

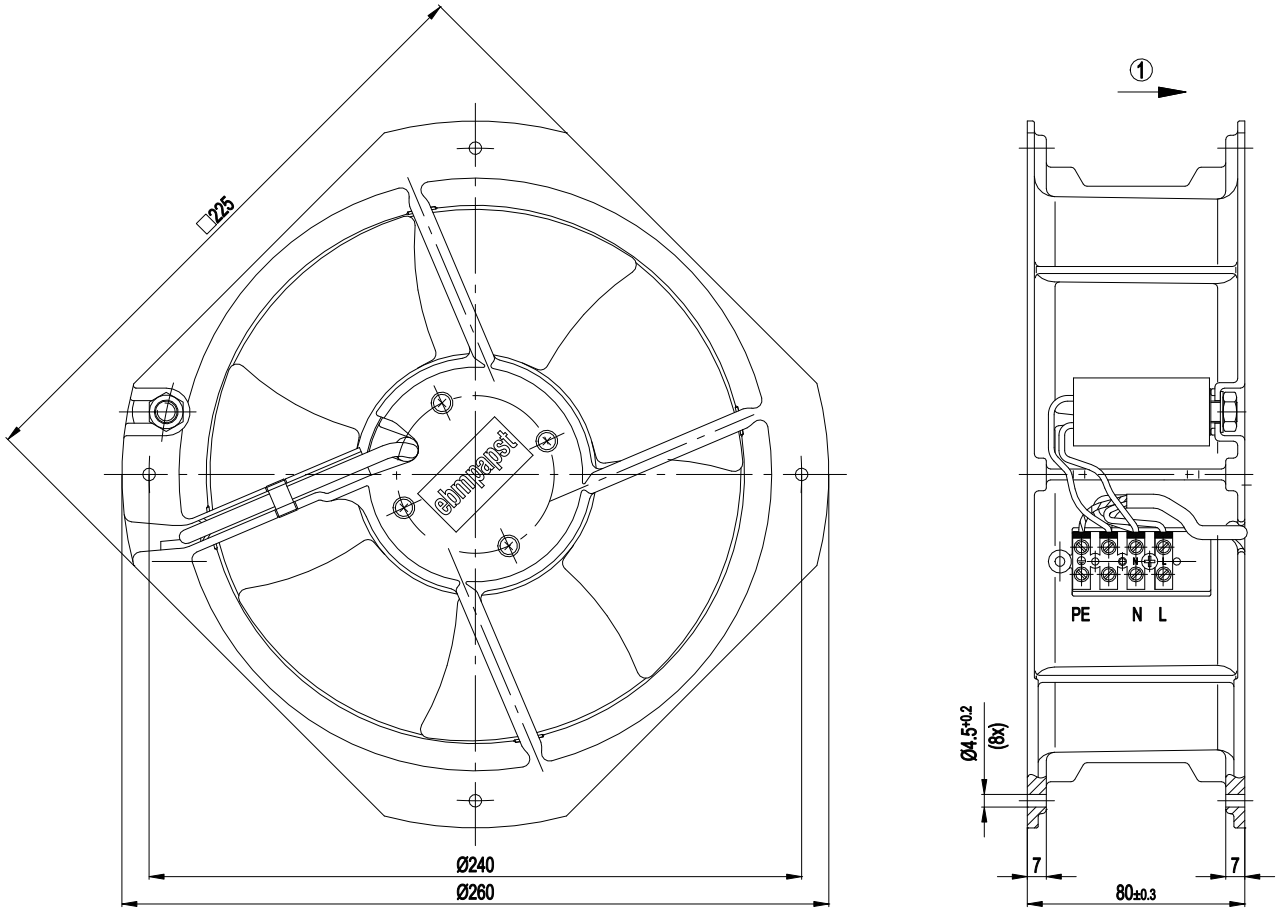

1	Direction of air flow "V"

Terminal/plug assignment

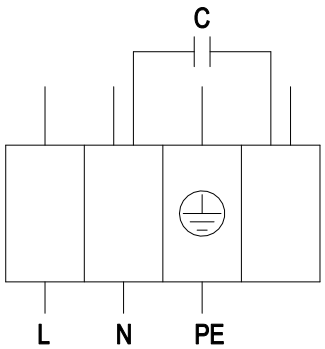

L	blue	N	black	PE	green/yellow

ebm-papst Mulfingen GmbH & Co. KG · Bachmühle 2 · D-74673 Mulfingen · Phone +49 (0) 7938 81-0 · Fax +49 (0) 7938 81-110 · info1@de.ebmpapst.com · www.ebmpapst.com

AC axial compact fan

sickle-shaped blades (S series)

Curves: Air performance 50 Hz

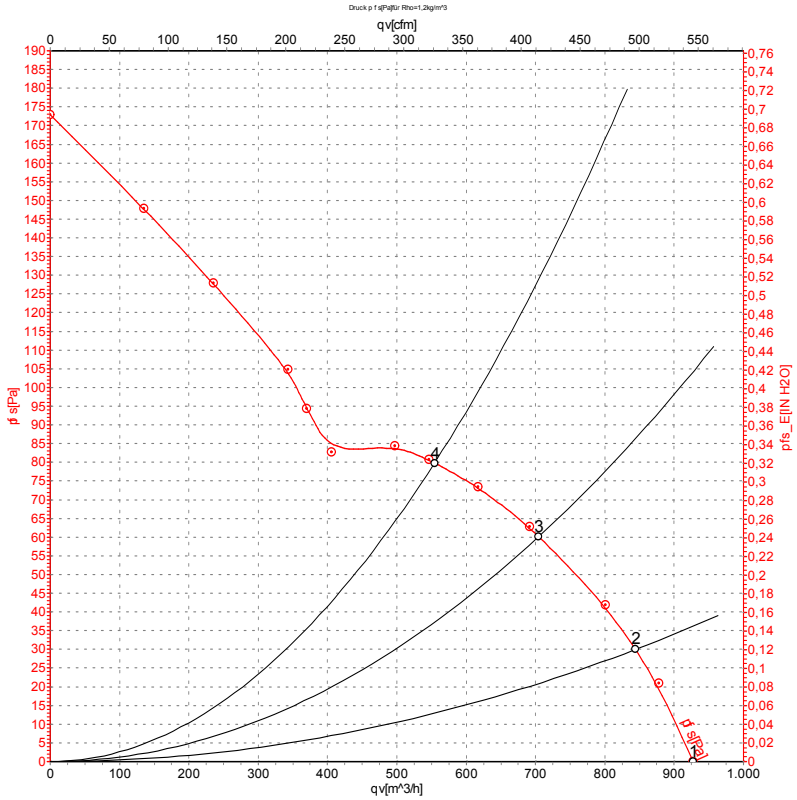

Measurement: LU-57317-1

Air performance measured according to ISO 5801 installation category A. For detailed information on the measurement setup, contact ebm-papst. Intake sound level: Sound power level according to ISO 13347 / sound pressure level measured at 1 m distance from fan axis. The values given are valid under the specified measuring conditions and may vary due to conditions of installation. For deviations from the standard configuration, the parameters have to be checked on the installed unit.

Measured values

	U	f	n	P_e	I	qv	p_{fs}	qv	p_{fs}
	V	Hz	min^{-1}	W	A	m^3/h	Pa	CFM	inH2O
1	115	50	2550	64	0.58	925	0	545	0.00
2	115	50	2520	64	0.59	845	30	495	0.12
3	115	50	2450	67	0.61	705	60	415	0.24
4	115	50	2400	70	0.63	555	80	325	0.32

U = Power supply · f = Frequency · n = Speed (rpm) · P_e = Power consumption · I = Current draw · qv = Air flow · p_{fs} = Pressure increase

ebm-papst Mulfingen GmbH & Co. KG · Bachmühle 2 · D-74673 Mulfingen · Phone +49 (0) 7938 81-0 · Fax +49 (0) 7938 81-110 · info1@de.ebmpapst.com · www.ebmpapst.com

AC axial compact fan

sickle-shaped blades (S series)

Curves: Air performance 60 Hz

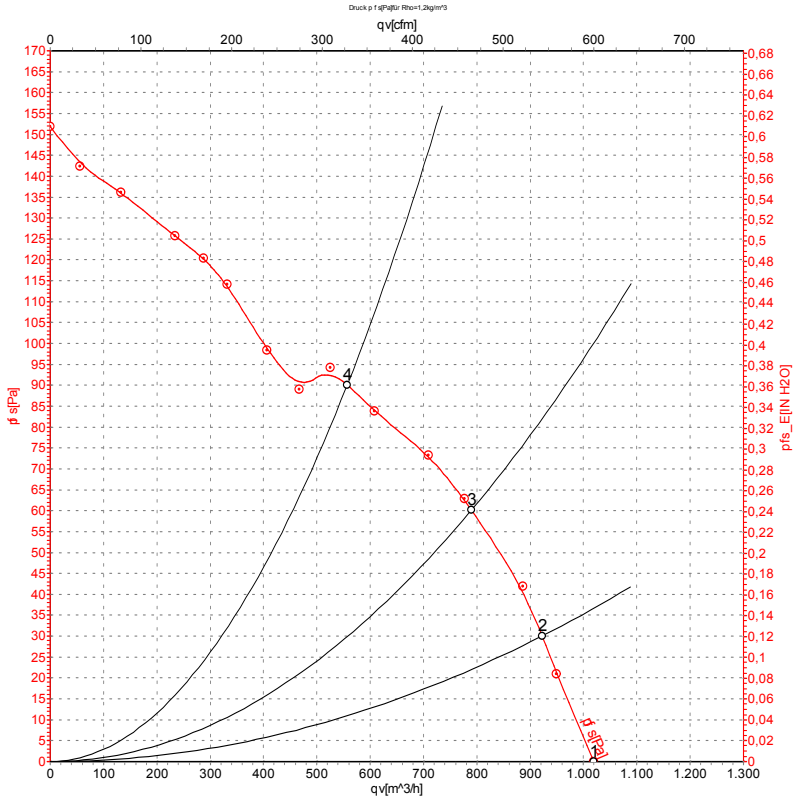

Measurement: LU-57315-1

Air performance measured according to ISO 5801 installation category A. For detailed information on the measurement setup, contact ebm-papst. Intake sound level: Sound power level according to ISO 13347 / sound pressure level measured at 1 m distance from fan axis. The values given are valid under the specified measuring conditions and may vary due to conditions of installation. For deviations from the standard configuration, the parameters have to be checked on the installed unit.

Measured values

	U	f	n	P_e	I	qv	p_{fs}	qv	p_{fs}
	V	Hz	min^{-1}	W	A	m^3/h	Pa	CFM	inH2O
1	115	60	2800	80	0.70	1020	0	600	0.00
2	115	60	2715	81	0.70	920	30	545	0.12
3	115	60	2620	85	0.73	790	60	465	0.24
4	115	60	2500	87	0.76	555	90	330	0.36

U = Power supply · f = Frequency · n = Speed (rpm) · P_e = Power consumption · I = Current draw · qv = Air flow · p_{fs} = Pressure increase

ebm-papst Mulfingen GmbH & Co. KG · Bachmühle 2 · D-74673 Mulfingen · Phone +49 (0) 7938 81-0 · Fax +49 (0) 7938 81-110 · info1@de.ebmpapst.com · www.ebmpapst.com