DATASHEET - DILM185A/22(RAC48)

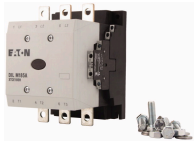

Contactor, 380 V 400 V 90 kW, 2 N/O, 2 NC, RAC 48: 42 - 48 V 50/60 Hz, AC operation, Screw connection

Powering Business Worldwide™

Part no.	**DILM185A/22(RAC48)**
Catalog No.	**139535**
Alternate Catalog No.	**XTCE185H22W**
EL-Nummer (Norway)	**4134275**

Delivery program

Product range			Contactors
Application			Contactors for Motors
Subrange			Standard devices greater than 170 A
Utilization category			AC-1: Non-inductive or slightly inductive loads, resistance furnaces NAC-3: Normal AC induction motors: starting, switch off during running AC-4: Normal AC induction motors: starting, plugging, reversing, inching
Connection technique			Screw connection
Rated operational current			
AC-3			
380 V 400 V	I_e	A	185
AC-1			
Conventional free air thermal current, 3 pole, 50 - 60 Hz			
Open			
at 40 °C	$I_{th} = I_e$	A	337
enclosed	I_{th}	A	245
Conventional free air thermal current, 1 pole			
open	I_{th}	A	688
enclosed	I_{th}	A	613
Max. rating for three-phase motors, 50 - 60 Hz			
AC-3			
220 V 230 V	P	kW	55
380 V 400 V	P	kW	90
660 V 690 V	P	kW	140
1000 V	P	kW	108
AC-4			
220 V 230 V	P	kW	41
380 V 400 V	P	kW	75
660 V 690 V	P	kW	102
1000 V	P	kW	77
Contact sequence			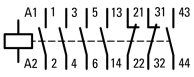
Can be combined with auxiliary contact			DILM1000-XHI…
Actuating voltage			RAC 48: 42 - 48 V 50/60 Hz
Voltage AC/DC			AC operation
Contacts			
N/O = Normally open			2 N/O
N/C = Normally closed			2 NC
Auxiliary contacts			
possible variants at auxiliary contact module fitting options			on the side: 2 x DILM1000-XHI(V)11-SI; 2 x DILM1000-XHI11-SA
Side mounting auxiliary contacts			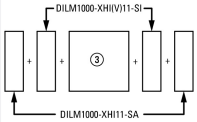

Instructions			Interlocked opposing contacts according to IEC/EN 60947-5-1 Appendix L, inside the auxiliary contact module Auxiliary contacts used as mirror contacts according to IEC/EN 60947-4-1 Appendix F (not N/C late open)
Instructions			integrated suppressor circuit in actuating electronics 660 V, 690 V or 1000 V: not directly reversing

Technical data

General

Standards			IEC/EN 60947, VDE 0660, UL, CSA
Lifespan, mechanical			
AC operated	Operations	x 10^6	10
Operating frequency, mechanical			
AC operated	Operations/h		3000
Climatic proofing			Damp heat, constant, to IEC 60068-2-78 Damp heat, cyclic, to IEC 60068-2-30
Ambient temperature			
Open		°C	-40 - +60
Enclosed		°C	- 40 - + 40
Storage		°C	- 40 - + 80
Mounting position			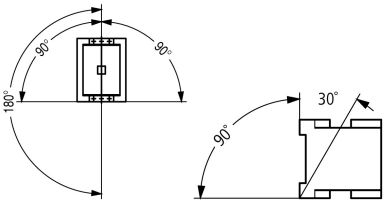
Mechanical shock resistance (IEC/EN 60068-2-27)			
Half-sinusoidal shock, 10 ms			
Main contacts			
N/O contact		g	10
Auxiliary contacts			
N/O contact		g	10
N/C contact		g	8
Degree of Protection			IP00
Protection against direct contact when actuated from front (EN 50274)			Finger and back-of-hand proof with terminal shroud or terminal block
Altitude		m	Max. 2000
Weight			
AC operated		kg	3.54
DC operated		kg	3.54
Weight		kg	3.54
Terminal capacity main cable			
Flexible with cable lug		mm^2	50 - 185
Stranded with cable lug		mm^2	50 - 185
Solid or stranded		AWG	1/0 - 350 MCM
Flat conductor	Lamellenzahl x Breite x Dicke	mm	Fixing with flat cable terminal or cable terminal blocks See terminal capacity for cable terminal blocks
Busbar	Width	mm	32
Main cable connection screw/bolt			M10
Tightening torque		Nm	24
Terminal capacity control circuit cables			
Solid		mm^2	1 x (0.75 - 2.5) 2 x (0.75 - 2.5)
Flexible with ferrule		mm^2	1 x (0.75 - 2.5) 2 x (0.75 - 2.5)
Solid or stranded		AWG	18 - 14
Control circuit cable connection screw/bolt			M3.5
Tightening torque		Nm	1.2
Tool			

Main cable			
Width across flats		mm	16
Control circuit cables			
Pozidriv screwdriver		Size	2

Main conducting paths

Rated impulse withstand voltage	U_{imp}	V AC	8000
Overvoltage category/pollution degree			III/3
Rated insulation voltage	U_i	V AC	1000
Rated operational voltage	U_e	V AC	1000
Safe isolation to EN 61140			
between coil and contacts		V AC	1000
between the contacts		V AC	1000
Making capacity (p.f. to IEC/EN 60947)		A	2700
Breaking capacity			
220 V 230 V		A	2250
380 V 400 V		A	2250
500 V		A	2250
660 V 690 V		A	2250
1000 V		A	760
Component lifespan			
			AC1: See → Engineering, characteristic curves AC3: See → Engineering, characteristic curves AC4: See → Engineering, characteristic curves
Short-circuit rating			
Short-circuit protection maximum fuse			
Type “2” coordination			
400 V	gG/gL 500 V	A	315
690 V	gG/gL 690 V	A	250
1000 V	gG/gL 1000 V	A	160
Type “1” coordination			
400 V	gG/gL 500 V	A	400
690 V	gG/gL 690 V	A	315
1000 V	gG/gL 1000 V	A	200

AC

AC-1			
Rated operational current			
Conventional free air thermal current, 3 pole, 50 - 60 Hz			
Open			
at 40 °C	$I_{th} = I_e$	A	337
at 50 °C	$I_{th} = I_e$	A	301
at 55 °C	$I_{th} = I_e$	A	287
at 60 °C	$I_{th} = I_e$	A	275
enclosed	I_{th}	A	245
Notes			At maximum permissible ambient air temperature.
Conventional free air thermal current, 1 pole			
Note			at maximum permissible ambient air temperature
open	I_{th}	A	688
enclosed	I_{th}	A	613
AC-3			
Rated operational current			
Open, 3-pole: 50 – 60 Hz			
Notes			At maximum permissible ambient temperature (open.)
220 V 230 V	I_e	A	185
240 V	I_e	A	185
380 V 400 V	I_e	A	185

415 V	I_e	A	185
440V	I_e	A	185
500 V	I_e	A	185
660 V 690 V	I_e	A	150
1000 V	I_e	A	76
Motor rating	P	kWh	
220 V 230 V	P	kW	55
240V	P	kW	62
380 V 400 V	P	kW	90
415 V	P	kW	110
440 V	P	kW	115
500 V	P	kW	132
660 V 690 V	P	kW	140
1000 V	P	kW	108
AC-4			
Rated operational current			
Open, 3-pole: 50 – 60 Hz			
220 V 230 V	I_e	A	136
240 V	I_e	A	136
380 V 400 V	I_e	A	136
415 V	I_e	A	136
440 V	I_e	A	136
500 V	I_e	A	136
660 V 690 V	I_e	A	110
1000 V	I_e	A	55
Motor rating	P	kWh	
220 V 230 V	P	kW	41
240 V	P	kW	45
380 V 400 V	P	kW	75
415 V	P	kW	80
440 V	P	kW	85
500 V	P	kW	96
660 V 690 V	P	kW	102
1000 V	P	kW	77

Condensor operation

Individual compensation, rated operational current I_e of three-phase capacitors			
Open			
up to 525 V		A	220
690 V		A	133
Max. inrush current peak		x I_e	30
Component lifespan	Operations	x 10^6	0.1
Max. operating frequency		Ops/h	200

DC

Rated operational current, open			
DC-1			
Notes			see DILDC300/DILDC600 or on request

Current heat loss

3 pole, at I_{th} (60°)		W	34
Current heat loss at I_e to AC-3/400 V		W	16
Impedance per pole		mΩ	0.15

Magnet systems

Voltage tolerance			
U_S			48 - 110 V 40-60 Hz
AC operated	Pick-up		0.8 x $U_{S\ min}$ - 1.15 x $U_{S\ max}$

AC operated	Drop-out		0.25 x $U_{S\ min}$ - 0.6 x $U_{S\ max}$
Power consumption of the coil in a cold state and 1.0 x U_S			
Pull-in power	Pick-up	VA	210
Pull-in power	Pick-up	W	180
Sealing power	Sealing	VA	2.6
Sealing power	Sealing	W	2.1
Duty factor		% DF	100
Changeover time at 100 % U_S (recommended value)			
Main contacts			
Closing delay		ms	60
Opening delay		ms	40

Electromagnetic compatibility (EMC)

Electromagnetic compatibility			This product is designed for operation in industrial environments (environment A). Its use in residential environments (environment B) may cause radio-frequency interference, requiring additional noise suppression measures.

Rating data for approved types

Switching capacity			
Maximum motor rating			
Three-phase			
200 V 208 V		HP	50
230 V 240 V		HP	60
460 V 480 V		HP	125
575 V 600 V		HP	150
General use		A	250
Auxiliary contacts			
Pilot Duty			
AC operated			A600
DC operated			P300
General Use			
AC		V	600
AC		A	15
DC		V	250
DC		A	1
Short Circuit Current Rating		SCCR	
Basic Rating			
SCCR		kA	10
max. Fuse		A	700
max. CB		A	800
480 V High Fault			
SCCR (fuse)		kA	100
max. Fuse		A	600 Class J
SCCR (CB)		kA	65
max. CB		A	350
600 V High Fault			
SCCR (fuse)		kA	100
max. Fuse		A	600 Class J
SCCR (CB)		kA	50
max. CB		A	350
Special Purpose Ratings			
Definite Purpose Ratings (100,000 cycles acc. to UL 1995)			
LRA 480V 60Hz 3phase		A	2016
FLA 480V 60Hz 3phase		A	336
LRA 600V 60Hz 3phase		A	1680
FLA 600V 60Hz 3phase		A	280

Design verification as per IEC/EN 61439

Technical data for design verification			
Rated operational current for specified heat dissipation	I_n	A	185
Heat dissipation per pole, current-dependent	P_{vid}	W	5.33
Equipment heat dissipation, current-dependent	P_{vid}	W	0
Static heat dissipation, non-current-dependent	P_{vs}	W	2.1
Heat dissipation capacity	P_{diss}	W	0
Operating ambient temperature min.		°C	-40
Operating ambient temperature max.		°C	60
IEC/EN 61439 design verification			
10.2 Strength of materials and parts			
10.2.2 Corrosion resistance			Meets the product standard's requirements.
10.2.3.1 Verification of thermal stability of enclosures			Meets the product standard's requirements.
10.2.3.2 Verification of resistance of insulating materials to normal heat			Meets the product standard's requirements.
10.2.3.3 Verification of resistance of insulating materials to abnormal heat and fire due to internal electric effects			Meets the product standard's requirements.
10.2.4 Resistance to ultra-violet (UV) radiation			Meets the product standard's requirements.
10.2.5 Lifting			Does not apply, since the entire switchgear needs to be evaluated.
10.2.6 Mechanical impact			Does not apply, since the entire switchgear needs to be evaluated.
10.2.7 Inscriptions			Meets the product standard's requirements.
10.3 Degree of protection of ASSEMBLIES			Does not apply, since the entire switchgear needs to be evaluated.
10.4 Clearances and creepage distances			Meets the product standard's requirements.
10.5 Protection against electric shock			Does not apply, since the entire switchgear needs to be evaluated.
10.6 Incorporation of switching devices and components			Does not apply, since the entire switchgear needs to be evaluated.
10.7 Internal electrical circuits and connections			Is the panel builder's responsibility.
10.8 Connections for external conductors			Is the panel builder's responsibility.
10.9 Insulation properties			
10.9.2 Power-frequency electric strength			Is the panel builder's responsibility.
10.9.3 Impulse withstand voltage			Is the panel builder's responsibility.
10.9.4 Testing of enclosures made of insulating material			Is the panel builder's responsibility.
10.10 Temperature rise			The panel builder is responsible for the temperature rise calculation. Eaton will provide heat dissipation data for the devices.
10.11 Short-circuit rating			Is the panel builder's responsibility. The specifications for the switchgear must be observed.
10.12 Electromagnetic compatibility			Is the panel builder's responsibility. The specifications for the switchgear must be observed.
10.13 Mechanical function			The device meets the requirements, provided the information in the instruction leaflet (IL) is observed.

Technical data ETIM 8.0

Low-voltage industrial components (EG000017) / Power contactor, AC switching (EC000066)			
Electric engineering, automation, process control engineering / Low-voltage switch technology / Contactor (LV) / Power contactor, AC switching (ecl@ss10.0.1-27-37-10-03 [AAB718015])			
Rated control supply voltage Us at AC 50HZ		V	48 - 110
Rated control supply voltage Us at AC 60HZ		V	48 - 110
Rated control supply voltage Us at DC		V	0 - 0
Voltage type for actuating			AC
Rated operation current Ie at AC-1, 400 V		A	337
Rated operation current Ie at AC-3, 400 V		A	185
Rated operation power at AC-3, 400 V		kW	90
Rated operation current Ie at AC-4, 400 V		A	136
Rated operation power at AC-4, 400 V		kW	75
Rated operation power NEMA		kW	93
Modular version			No
Number of auxiliary contacts as normally open contact			2
Number of auxiliary contacts as normally closed contact			2
Type of electrical connection of main circuit			Rail connection
Number of normally closed contacts as main contact			0

Number of normally open contacts as main contact		3

Approvals

Product Standards		IEC/EN 60947-4-1; UL 60947-4-1; CSA - C22.2 No. 60947-4-1-14; CE marking
UL File No.		E29096
UL Category Control No.		NLDX
CSA File No.		2389068
CSA Class No.		3211-04
North America Certification		UL listed, CSA certified
Specially designed for North America		No

Characteristics

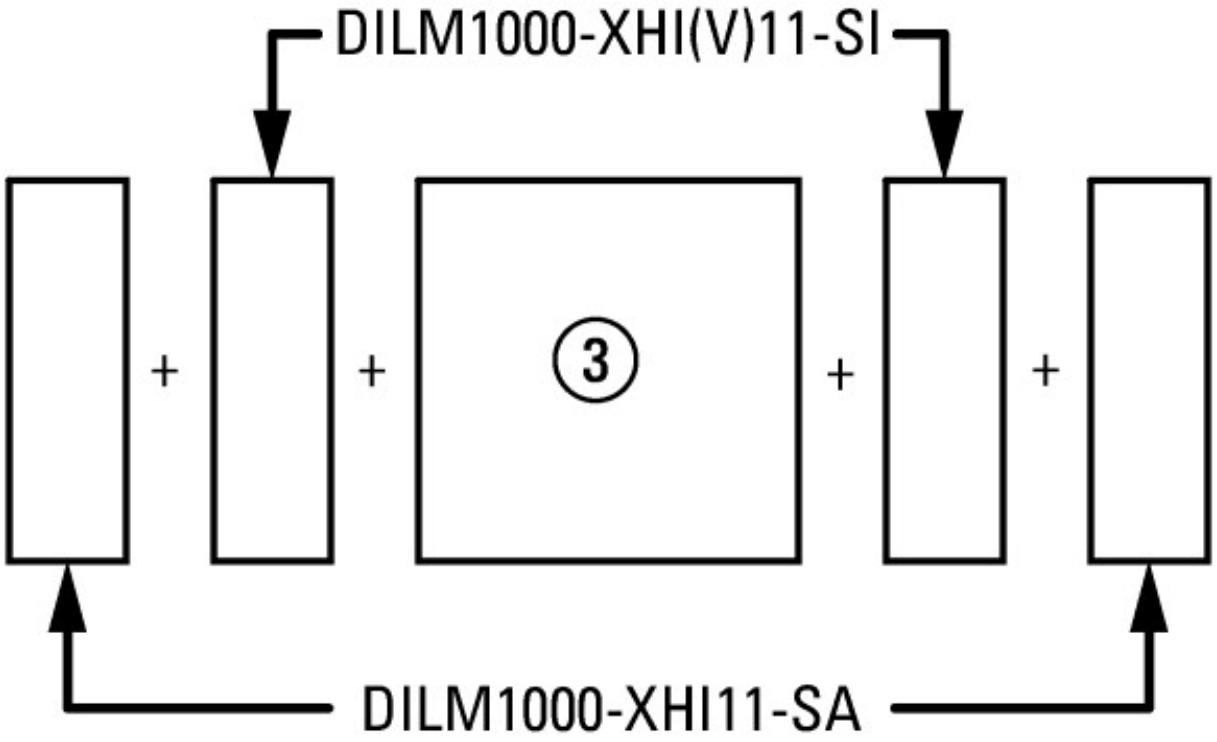

on the side: 2 x DILM1000-XHI(V)11-SI; 2 x DILM1000-XHI11-SA

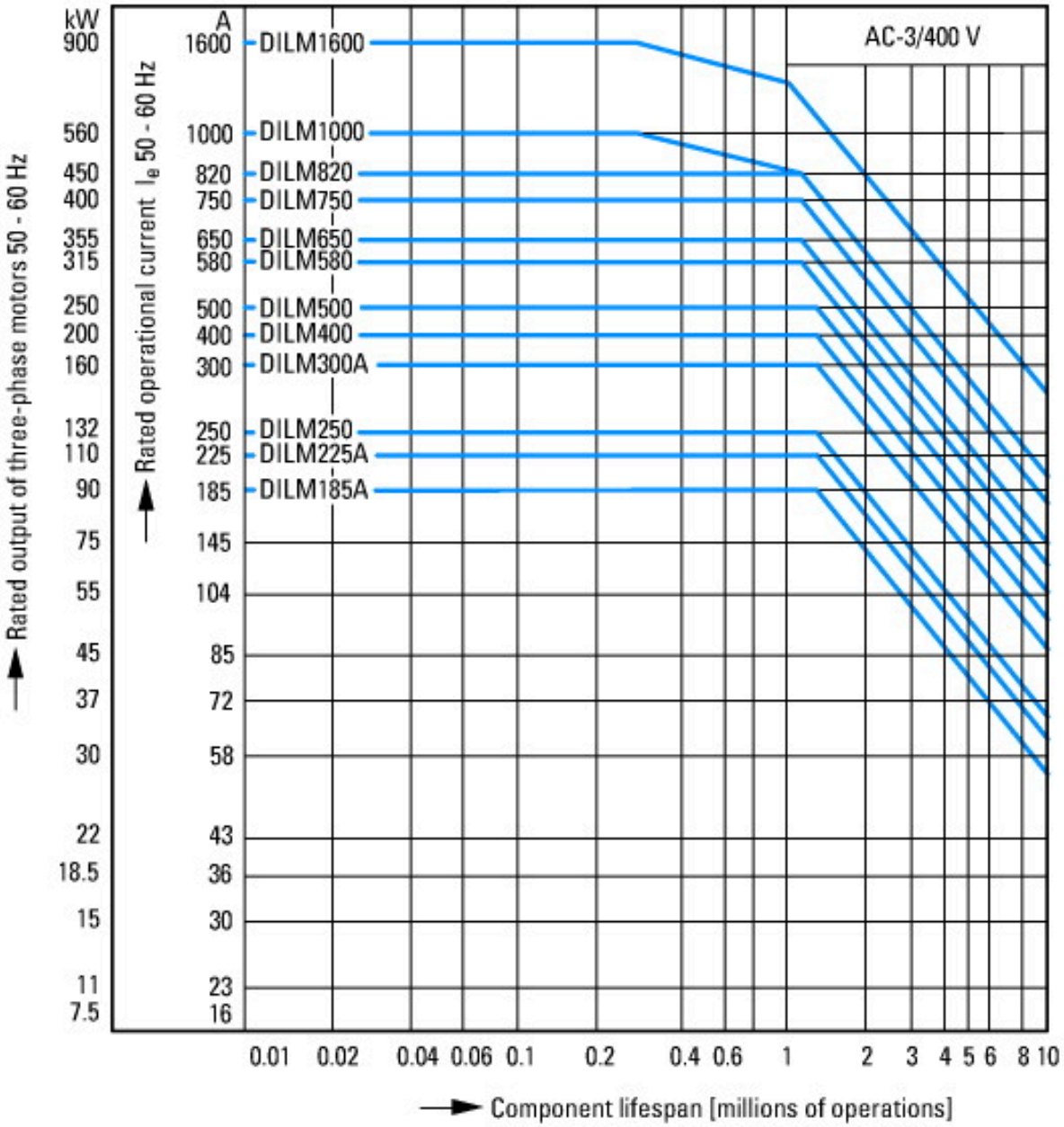

Normal switching duty
Normal AC induction motor
Operating characteristics
Switch on: from stop
Switch off: during run
Electrical characteristics:
Switch on: up to 6 x Rated motor current
Switch off: up to 1 x Rated motor current
Utility category
100 % AC-3
Typical Applications
Compressors
Lifts
Mixers
Pumps
Escalators
Agitators
fan
Conveyor belts
Centrifuges
Hinged flaps
Bucket-elevator
Air-conditioning systems
General drives for manufacturing and processing machines

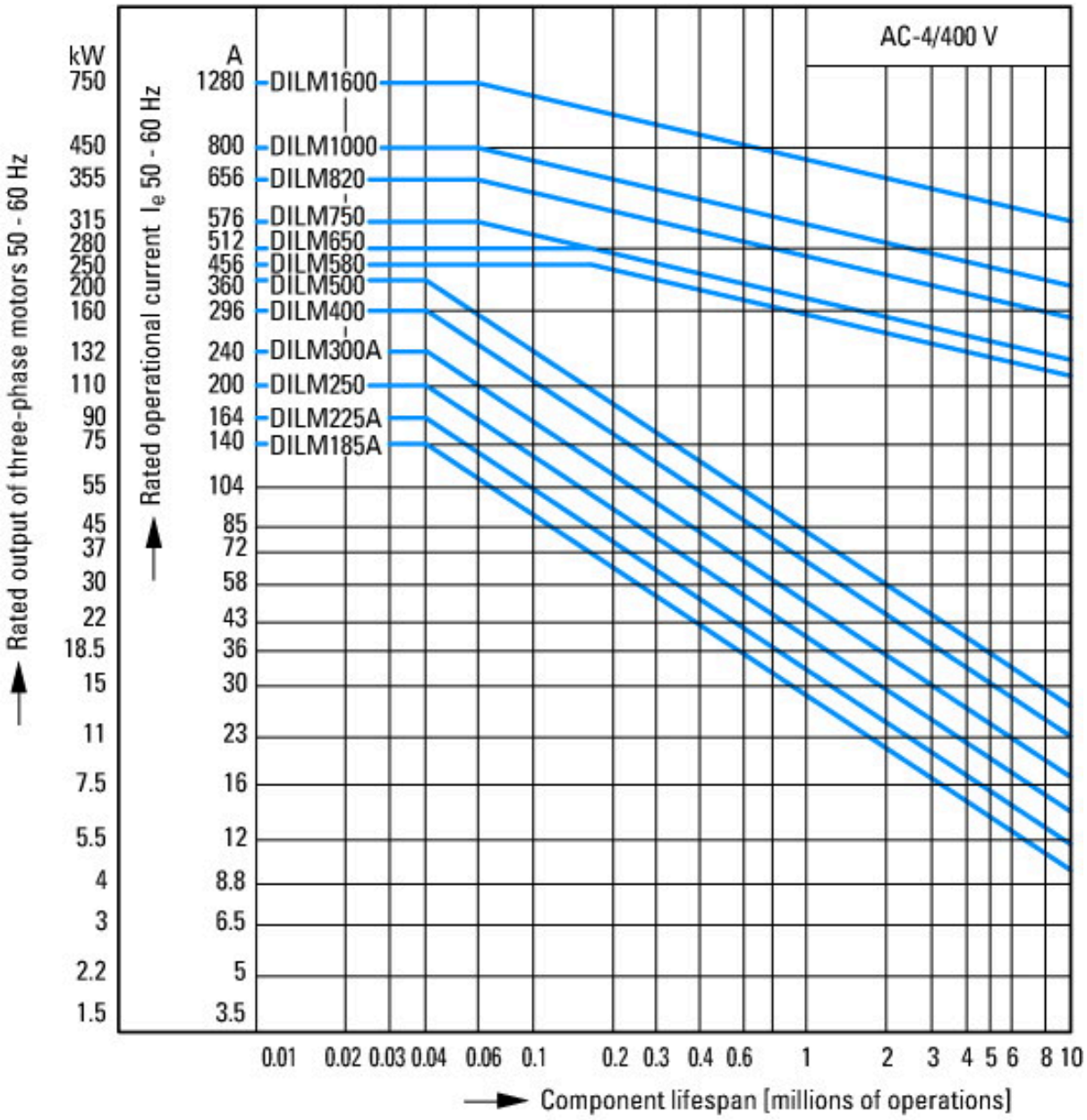

Extreme switching duty
Squirrel-cage motor
Operating characteristics
Inching, plugging, reversing
Electrical characteristics
Make: up to 6 x rated motor current
Break: up to 6 x rated motor current
Utilization category
100 % AC-4
Typical applications
Printing presses
Wire-drawing machines
Centrifuges
Special drives for manufacturing and processing machines

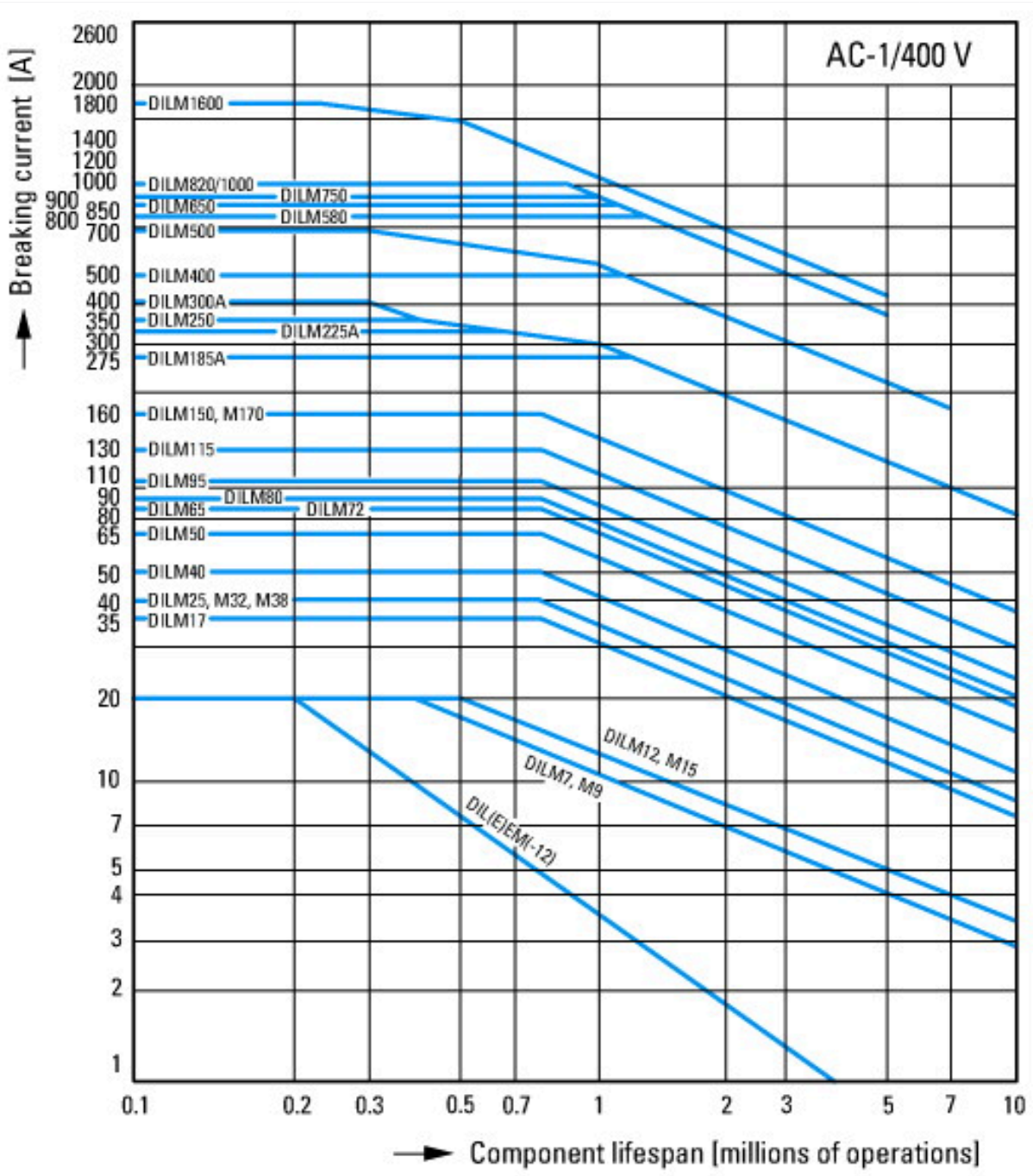

Switching conditions for 3 pole, non-motor loads
Operating characteristics
Non inductive and slightly inductive loads
Electrical characteristics
Switch on: 1 x rated operational current
Switch off: 1 x rated operational current
Utilization category
100 % AC-1
Typical examples of application
Electric heat

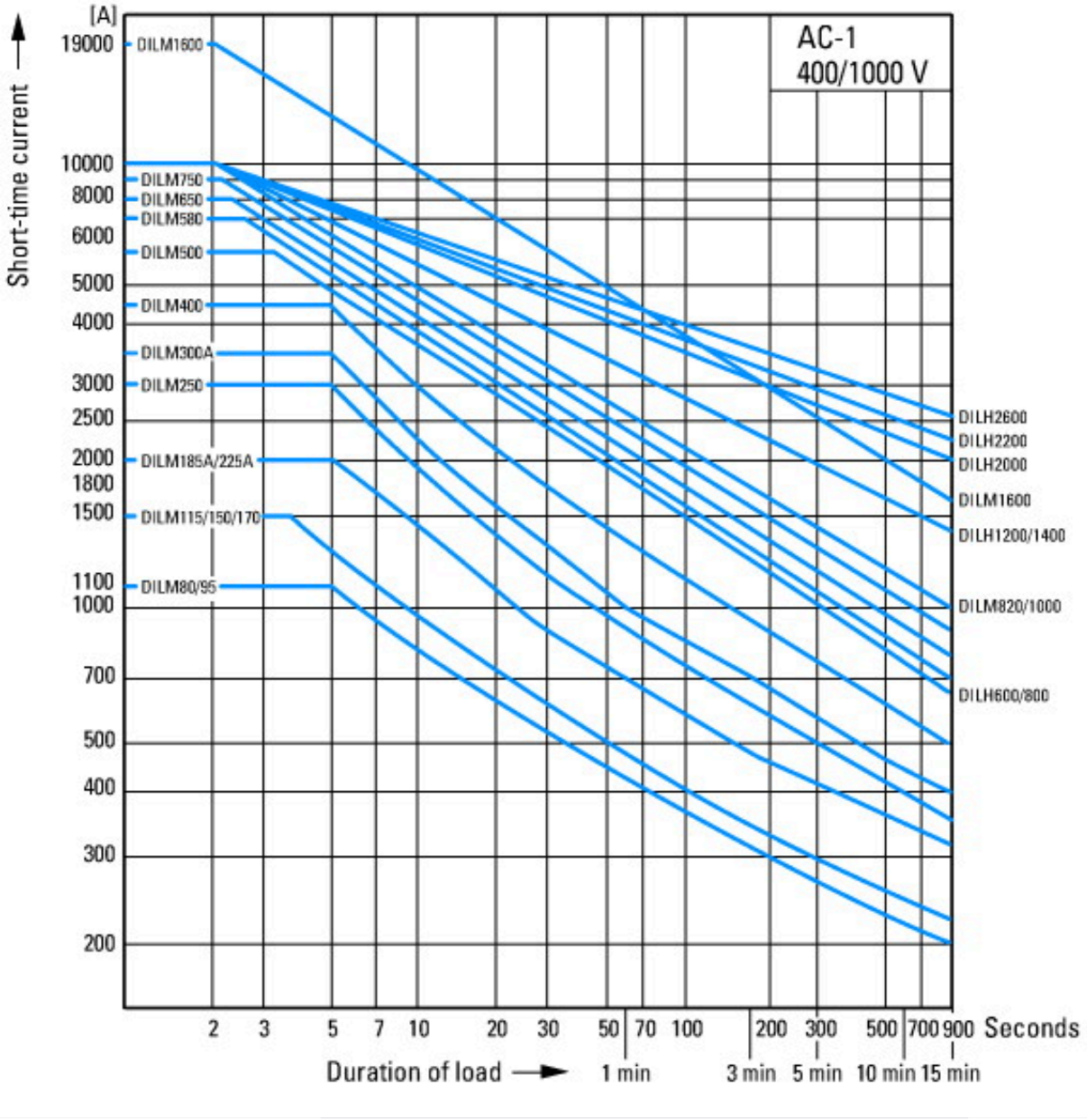

Short-time loading, 3-pole
Time interval between two loading cycles: 15 minutes

Dimensions

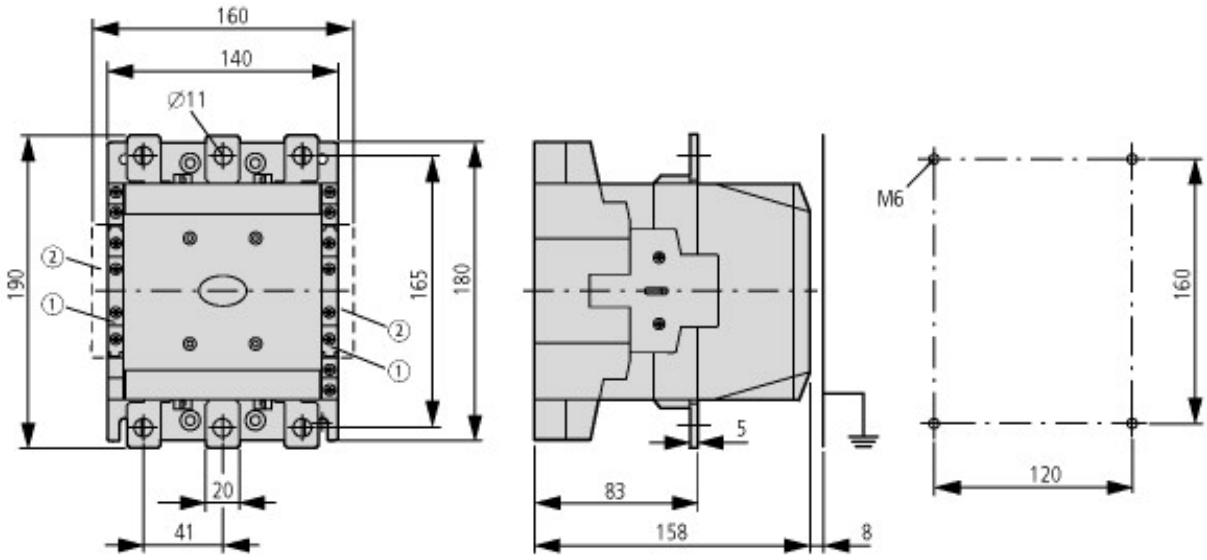

① DILM1000-XHI(V)11-SI
② DILM1000-XHI11-SA

DILM185…DILM500
DILMC185-S…DILMC500-S
DILM185-S…DILM500-S

Additional product information (links)

IL03406001Z Contactors	
IL03406001Z Contactors	https://es-assets.eaton.com/DOCUMENTATION/AWA_INSTRUCTIONS/IL03406001Z2021_08.pdf
Motor starters and "Special Purpose Ratings" for the North American market	http://www.eaton.eu/ecm/groups/public/@pub/@europe/@electrical/documents/content/pct_3258146.pdf
Switchgear of Power Factor Correction Systems	http://www.moeller.net/binary/ver_techpapers/ver934en.pdf
X-Start - Modern Switching Installations Efficiently Fitted and Wired Securely	http://www.moeller.net/binary/ver_techpapers/ver938en.pdf
Mirror Contacts for Highly-Reliable Information Relating to Safety-Related Control Functions	http://www.moeller.net/binary/ver_techpapers/ver944en.pdf
Effect of the Cabel Capacitance of Long Control Cables on the Actuation of Contactors	http://www.moeller.net/binary/ver_techpapers/ver949en.pdf
Switchgear for Luminaires	http://www.moeller.net/binary/ver_techpapers/ver955en.pdf
Standard Compliant and Functionally Safe Engineering Design with Mechanical Auxiliary Contacts	http://www.moeller.net/binary/ver_techpapers/ver956en.pdf
The Interaction of Contactors with PLCs	http://www.moeller.net/binary/ver_techpapers/ver957en.pdf
Busbar Component Adapters for modern Industrial control panels	http://www.moeller.net/binary/ver_techpapers/ver960en.pdf

© 07/2022 by Eaton Industries GmbH