PT16R-2001-U1-H1141
Pressure Transmitter – With Voltage Output (3-Wire)

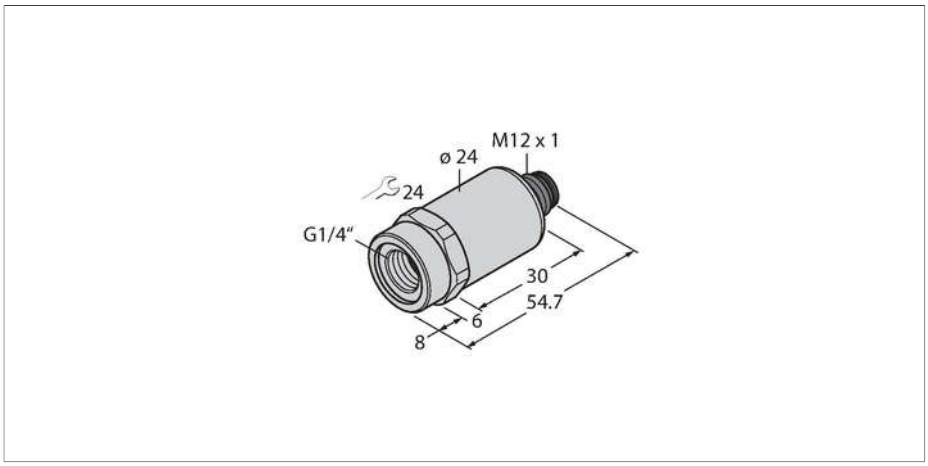



Technical data

Type	PT16R-2001-U1-H1141
ID no.	6836372
Medium temperature	-40…+135 °C
Pressure range	
Relative pressure bar	0…16 bar rel.
	0…232.06 psi
	0…1.6 MPa
Admissible overpressure	≤ 48 bar
Burst pressure	≥ 96 bar
Response time	< 2 ms, typ. 1 ms
Long-term stability	± 0.25 % FS, according to IEC EN 60770-1
Power supply	
Operating voltage	12…33 VDC
Current consumption	≤ 7 mA
Short-circuit/reverse polarity protection	yes / yes
Insulation class	III
Output 1	Analog output
Output function	Analog output voltage
Analog output	
Voltage output	0…10 V
Load	≤ 100 nF/>10 kΩ
Resolution	<± 0.1 % FS
Accuracy LHR	± 0.3 % FS BSL
Housing material	Stainless-steel/Plastic, 1.4404 (AISI 316L)/polyacrylamide 50 % GF UL 94 V-0
Process connection	G 1/4" female thread
Pressure connection material	Stainless steel 1.4404 (AISI 316L)

Features

- Fully welded metal measuring cell
- Pressure range 0…16 bar rel.
- 12…33 VDC
- Analog output 0…10 V
- Process connection G1/4" female thread
- Plug-in device, M12 × 1

Wiring diagram

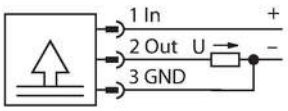

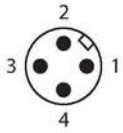

Functional principle

The pressure sensors in the PT…-2000 product series operate with a fully welded metal measuring cell in various pressure ranges of up to -1…1000 bar in 2-, 3- or even 4-wire technology. Depending on the sensor variant, the processed signal is available as an analog output signal (4…20 mA, 0… 10 V, 0…5 V, 1…6 V, ratiometric) or as a digital IO-Link process parameter. The IO-Link sensor variants also have two independently configurable switching outputs.
In addition to the standard variants, there are special sensors for uses such as ATEX areas or for oxygen applications.
A wide range of process connections and electrical connections offer a high degree of flexibility in a wide range of applications.

PT16R-2001-U1-H1141| 15-04-2021 18-20 | Technical modifications reserved

Technical data

Pressure transducer material	Stainless steel 1.4016 (AISI 430)
Wrench size pressure connection / coupling nut	24
Max. tightening torque of housing nut	20 Nm
Electrical connection	Connectors, M12 × 1
Protection class	IP67
Ambient temperature	-30…+85 °C
Storage temperature	-50…+100 °C
Shock resistance	100 g, 11 ms, half sinusoidal curve, all 6 directions, free fall from 1 m onto concrete (6x) , acc. to IEC 68-2-27
Vibration resistance	20 g, 15…2000 Hz, 15…25 Hz with amplitude +/- 15 mm, 1 octave/minute all 3 directions, 50 continuous loads
Approvals	UL
Reference conditions acc. to IEC 61298-1	
Temperature	15…+25 °C
Atmospheric pressure	860…1060 hPa abs.
Humidity	45…75 % rel.
Auxiliary power	24 VDC
Temperature behaviour	
MTTF	1238 years acc. to SN 29500 (Ed. 99) 40 °C
Included in delivery	FKM O-ring special (1 pc)

Technical data

Type	PT16R-2001-U1-H1141
ID no.	6836372
Pressure range	
Relative pressure bar	0…16 bar rel.
	0…232.06 psi
	0…1.6 MPa
Admissible overpressure	≤ 48 bar
Burst pressure	≥ 96 bar
Response time	< 2 ms, typ. 1 ms
Long-term stability	0.25 % FS, according to IEC EN 60770-1
Power supply	
Operating voltage	12…33 VDC
Current consumption	≤ 7 mA
Short-circuit/reverse polarity protection	yes / yes
Protection type and class	IP67 / III
Insulation voltage	750 VDC

PT16R-2001-U1-H1141| 15-04-2021 18-20 | Technical modifications reserved

Technical data

Outputs	
Output 1	Analog output
Output function	Analog output voltage
Analog output	
Voltage output	0…10 V
Load	≤ 100 nF/>10 kΩ
Resolution	<± 0.1 % FS
Accuracy LHR	± 0.3 % FS BSL
Temperature behaviour	
Medium temperature	-40…+135 °C
Temperature coefficient	± 0.2 % of full scale/10 K
Ambient conditions	
Ambient temperature	-30…+85 °C
Storage temperature	-50…+100 °C
Vibration resistance	20 g, 15…2000 Hz, 15…25 Hz with amplitude +/- 15 mm, 1 octave/minute all 3 directions, 50 continuous loads, acc. to IEC 68-2-6
Shock resistance	100 g, 11 ms, half sinusoidal curve, all 6 directions, free fall from 1 m onto concrete (6x) , acc. to IEC 68-2-27
Housing	
Housing material	Stainless-steel/Plastic, 1.4404 (AISI 316L)/polyacrylamide 50 % GF UL 94 V-0
Pressure connection material	Stainless steel 1.4404 (AISI 316L)
Pressure transducer material	Stainless steel 1.4016 (AISI 430)
Process connection	G 1/4" female thread
Wrench size pressure connection / coupling nut	24
Electrical connection	Connectors, M12 × 1
Max. tightening torque of housing nut	20 Nm
Reference conditions acc. to IEC 61298-1	
Temperature	15…+25 °C
Atmospheric pressure	860…1060 hPa abs.
Humidity	45…75 % rel.
Auxiliary power	24 VDC
Approvals	UL
MTTF	1238 years acc. to SN 29500 (Ed. 99) 40 °C
Included in delivery	FKM O-ring special (1 pc)

PT16R-2001-U1-H1141| 15-04-2021 18-20 | Technical modifications reserved