E10751

Damping magnet

MAGNET M3.0 HARD FERRITE

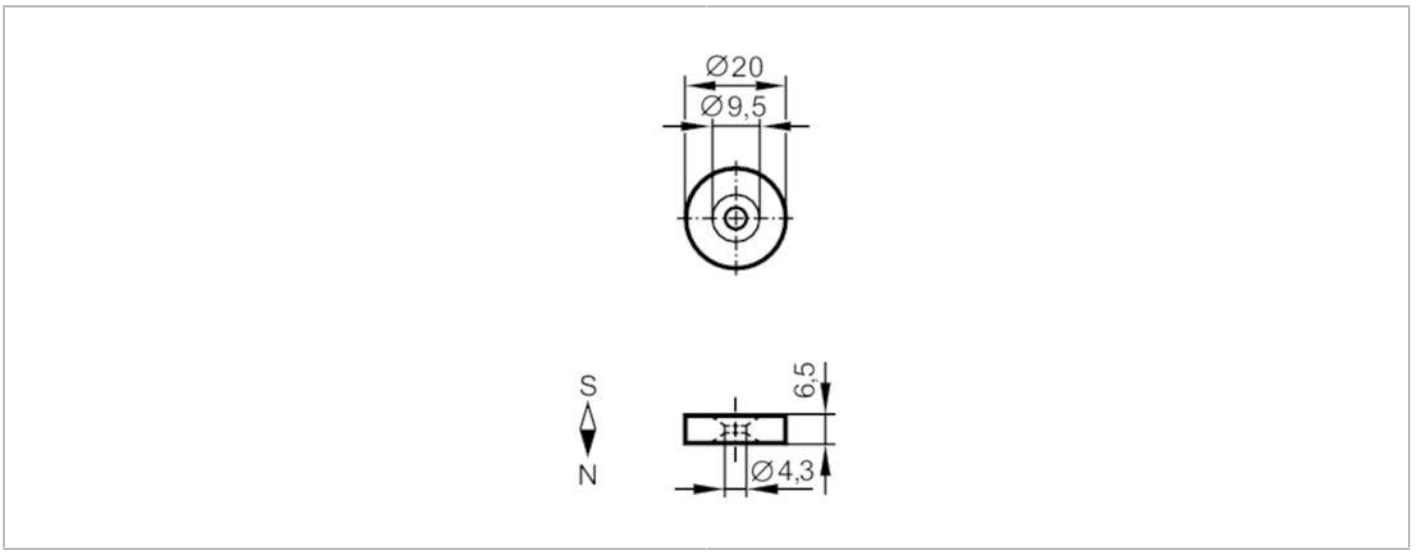

Operating conditions		
Ambient temperature	[°C]	-25...250
Mechanical data		
Weight	[g]	10.33
Dimensions	[mm]	Ø 20 / L = 6.5
Materials		hard ferrite HF 24/23
Magnetic field strength	[mT]	110
Remarks		
Pack quantity		1 pcs.