Option selector

F68★ – ★★★ – ★★★

Bowl
E Long
G Standard

Port
6 3/4“
8 1“
A 1 1/4“
B 1 1/2“
N No yoke

Thread
A PTF
B ISO Rc tapered
G ISO G parallel
N No yoke

Options
D With mechanical service life indicator
E With electrical service life indicator*
N No service life indicator

Drain
A Automatic
E Closed bottom
M Manual, spindle type
Q Manual, 1/4 turn

Bowl
C 1 litre (1 quart) no liquid indicator
M 0,5 litre (1 pint) no liquid indicator
R 0,5 litre (1 pint) with liquid indicator
U 1 litre (1 quart) With liquid indicator

Element
1 5 µm
2 25 µm
3 40 µm

* See Norgren publication IM-900.920 for specifications and electrical wire connections of the optional electric service indicator.

TECHNICAL FEATURES

TECHNICAL DATA

Fluid: Compressed air
Maximum pressure: 17 bar (250 psig)
Operating temperature*:
-20° to +80°C (0° to +175°F)
* Air supply must be dry enough to avoid ice formation at temperatures below +2°C (+35°F).
Partical removal: 5, 25 or 40 µm
Air quality: Within ISO 8573-1, Class 3 and Class 5 (particulates)
Typical flow with a 40 µm element at 6,3 bar (90 psig) inlet pressure and a 0,5 bar (7 psig) pressure drop: 190 dm^3/s (403 scfm)
1/4 turn manual drain connection: 1/8” pipe thread
Automatic drain connection: 1/8” pipe thread
Automatic drain operating conditions (float operated): Bowl pressure required to close drain: Greater than 0,3 bar (5 psig)
Bowl pressure required to open drain:
Less than 0,2 bar (3 psig)
Minimum air flow required to close drain:
1 dm^3/s (2 scfm)
Manual operation: Depress pin inside drain outlet to drain bowl
Nominal bowl size:
0,5 litre (1 pint U.S.)
1 litre (1 quart U.S.)
Materials:
Body: Aluminium
Yoke: Aluminium
Bowl: Aluminium
Liquid level indicator: Pyrex
Element: Sintered bronze or polypropylene
Elastomers: Synthetic rubber

REPLACEMENT ITEMS

Service kit (items circled on exploded view)	**4380-300**
0.5 litre bowl liquid level lens (19 thru 27)	**4380-060**
1 litre bowl liquid level lens (30 thru 38)	**4380-061**
Bronze element KITS:	
Filter element, 0,5 litre bowl, 5 µm (54, 55, 56)	**5576-197**
Filter element, 0,5 litre bowl, 25 µm (54, 55, 56)	**5576-198**
Filter element, 0,5 litre bowl, 40 µm (54, 55, 56)	**5576-199**
Plastic element KITS:	
Filter element, 0,5 litre bowl, 5 µm (53,55)	**5576-97**
Filter element, 0,5 litre bowl, 25 µm (53,55)	**5576-98**
Filter element, 0,5 litre bowl, 40 µm (53,55)	**5576-99**
Filter element, 1 litre bowl, 5 µm (55)	**5311-01**
Filter element, 1 litre bowl, 25 µm (55)	**5311-02**
Filter element, 1 litre bowl, 40 µm (55)	**5311-03**
Automatic drain, G1/8 outlet (49)	**3000-97**
Automatic drain, 1/8 PTF outlet (49)	**3000-10**
Manual drain, spindle type (44)	**684-84**
Manual drain, 1/4 turn (40)	**619-50**
Mechanical service life indicator (1)	**5797-50**
Electrical service life indicator (6)	**4020-51R**

INSTALLATION

1. Install yoke in air line - with air flow in direction of arrow on top of yoke, upstream of regulators, lubricators, and cycling valves, as close as possible to the air supply when filter is used as a main line filter, as close as posible to the device being serviced when filter is used as a final filter.
2. Connect piping to yoke ports using pipe thread sealant on male threads only.
3. Lubricate o-rings (15) with a light coat of o-ring grease, then place o-rings in grooves in body (14).
4. Place clamp ring under lugs on top of yoke.
5. Make sure arrows on yoke and filter point in same direction, then plug filter into yoke and tighten clamp ring hand tight.
6. Turn bowl into body until arrowhead on bowl is aligned with or to the right of the arrowhead on the body.
7. Flexible tube with 3mm (0.125”) minimum I.D. can be connected to the automatic drain. Avoid restrictions in the

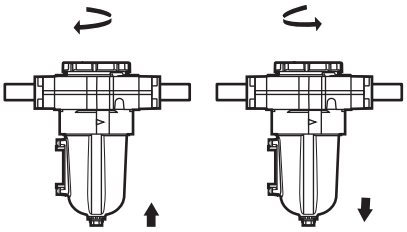

SERVICING

1. Open manual drain to expel accumulated liquids. Keep liquids below baffle (53).
2. Clean or replace filter element when dirty, when optional mechanical service life indicator shows approximately all red, or when optional electrical service life indicator provides an electrical output.

DIASSEMBLY

1. Shut off inlet pressure. Reduce pressure in inlet andoutlet lines to zero.
2. Unscrew the clamp ring and remove filter from yoke.
3. Disassemble in general accordance with the item numbers on exploded view. Do not remove the drains or the service indicators unless replacement is necessary. Remove and replace only if they malfunction. Do not attempt to remove rod (59), as it is cemented to body.

CLEANING

1. Clean lens (3, 24, 35) with warm water only. Do not submerge electrical service indicator

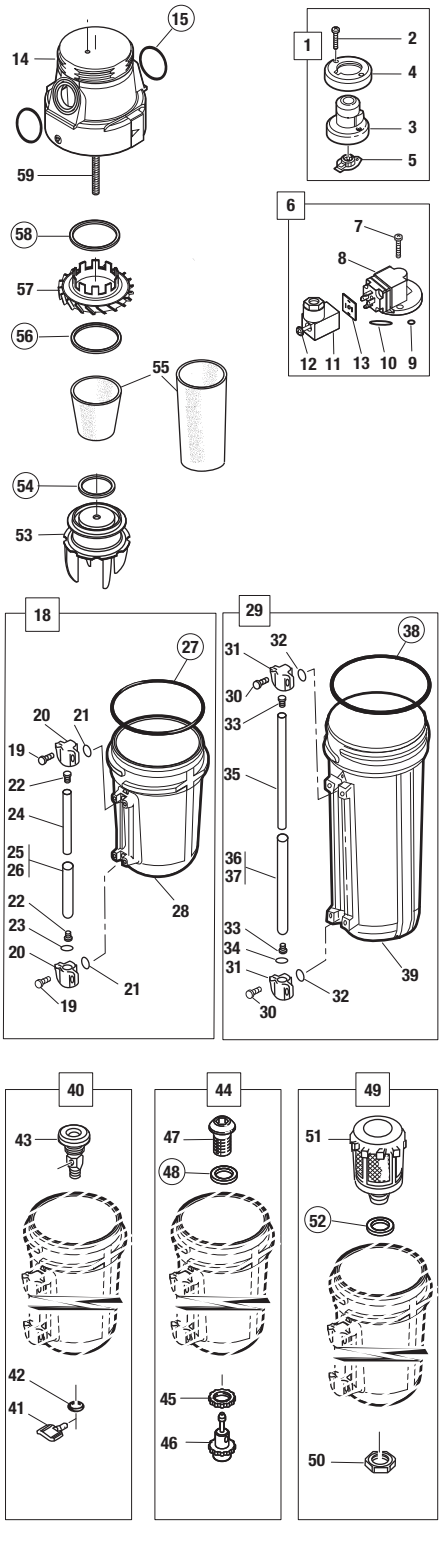

Our policy is one of continued research and development. We therefore reserve the right to amend, without notice, the specifications given in this document. (1999 - I&M8088d) © 2015 IMI International s.r.o.

(6) in water. Clean indicator (6) with dry, clean cloth. Clean other parts with warm water and soap.
2. Rinse and dry parts. Blow out internal passages in body (14) with clean, dry compressed air. Blow air through filter element (55) from inside to outside to remove surface contaminants.
3. Inspect parts. Replace those found to be damaged.

ASSEMBLY

1. Lubricate o-rings, the portion manual drain body (43) that contacts the bowl, and the hole in the manual drain body that accom modates the stem of drain valve (41) with o-ring grease.
2. Assemble the unit as shown on the exploded view.
3. Assemble the liquid indicator parts (19 thru 26, 30 thru 37) to reservoir. Apply a 0.9 to 1.8 kg (2 to 4 pound) clamping force to upper and lower sight glass brackets (20, 31). Tighten screws (19, 30).
4. Arrows on indicator (3, 8) and body (14) must point in same direction.
5. Torque Table

Item	Torque in N-m	(Inch-Pounds)
2, 7 (Screw)	2,8 to 3,9	(25 to 34)
19, 30 (Screw)	1,8 to 2,3	(16 to 20)
45, 50 (Nut)	0,8 to 1,2	(7 to 10)
53 (Baffle)	1,1 to 1,4	(10 to 12)

6. Turn bowl into body until arrowhead on bowl is aligned with or to the right of the arrowhead on the body.

WARNING

These products are intended for use in industrial compressed air systems only. Do not use these products where pressures and temperatures can exceed those listed under Technical Data. Polycarbonate plastic bowls can be damaged and possibly burst if exposed to such substances as certain solvents, strong alkalies, compressor oils containing ester-based additives or synthetic oils. Fumes of these substances in contact with the polycarbonate bowl, externally or internally, can also result in damage. Clean with warm water only.
Use metal bowl in applications where a plastic bowl might be exposed to substances that are incompatible with polycarbonate.
Before using these products with fluids other than air, for non industrial applications, or for life-support systems consult Norgren.

Use in potentially explosive atmospheres

Code of device according EC directive 2014/34/EU



II 2G Ex h IIC T6 Gb
II 2D Ex h IIIC T85°C Db

- Only non-flammable gasese to be used as a medium.
- Surface temperature dependant on process fluid temperature and ambient temperature - must be below the ignition temperature of the flammable gas or dust.
- Earth unit and/or pipework to avoid electrostatic discharge.
- Precautions should be taken to prevent hazard from adiabatic compression.
- Use wet cloth for cleaning.
- Protect the unit from object falling onto it.
- Avoid contact with corrosive environment.
- For servicing the unit it is recommended to carry out this work outside of the danger zone.
- For details of ignition hazard assessment contact Norgren.

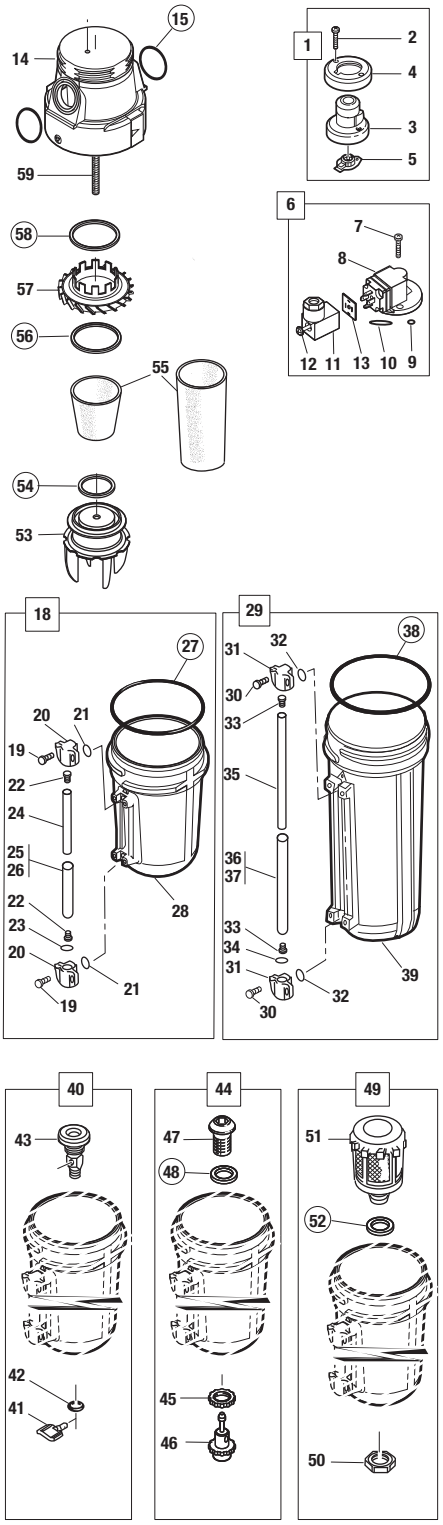

Our policy is one of continued research and development. We therefore reserve the right to amend, without notice, the specifications given in this document. (1999 - I&M8088d) © 2015 IMI International s.r.o.