VBRS4.4-2RKC4.880T-0.15/0.15/TXL4000
Industrial Splitter for Safety Applications – Y-splitter with Cable M12 × 1 male - 2 × M12 × 1 female

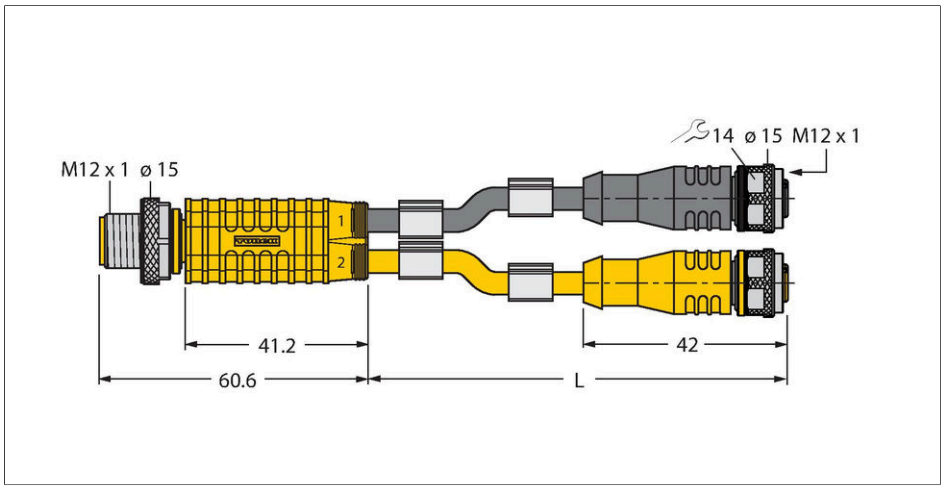



Technical data

Type	VBRS4.4-2RKC4.880T-0.15/0.15/ TXL4000
ID no.	6631286
Distributed I/O	2
Connector A	Male, M12 × 1, Straight
Number of Pins	4
Contacts	Metal, CuZn, Gold-plated
Contact carriers	Plastic, TPU, Black
Connector body	Plastic, TPU, Yellow
Coupling nut/screw	Brass, CuZn, Nickel-plated
Tightening torque (range)	0.8 … 1 Nm (observe max. torque of mating connector!)
Mechanical lifespan	> 100 Mating cycles
Pollution degree	3
Type of protection	IP67, Only in screwed condition
Connector B	2 x Female, M12 × 1, Straight
Contacts	Metal, CuZn, Gold-plated
Contact carriers	Plastic, TPU, Black
Connector body	Plastic, TPU, Black
Coupling nut/retaining screw	Brass, CuZn, Nickel-plated
Seal	Plastic, FPM/FKM
Tightening torque	0.8 … 1 Nm (observe max. torque of mating connector!)
Mechanical lifespan	> 100 Mating cycles
Pollution degree	3

Features



- Jacket material: PUR
- Jacket color: black/yellow
- Suitable for drag chain use
- Resistant to welding sparks
- Resistant to chemicals, UV radiation and oils
- Flame-retardant
- Free from halogen, silicone, PVC and LABS
- RoHS-compliant
- Protection class IP67
- Designed for safety applications
- Cable length: 0.15 / 0.15 m

Pin Assignment

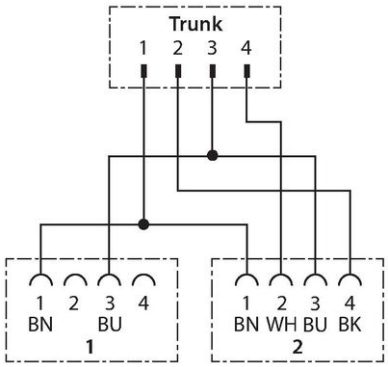

VBRS4.4-2RKC4.880T-0.15/0.15/TXL4000 05-05-2021 07-36 | Technical modifications reserved

Technical data

Protection class	IP67, Only in screwed condition
Cable length	0.15 m 0.15 m
Cable jacket	PUR
Core insulation	PP
Core cross-section	0.34 mm²
Electrical properties at +20 °C	
Rated voltage	250 V
Test voltage	2000 V
Current	4 A
Insulation resistance	> 30.5 MΩ/km
Mechanical and chemical properties	
Bending radius (stationary installation)	≥ 5 x Ø
Bending radius (flexible use)	≥ 10 x Ø
Bending cycles	≥ 5 million
Torsional stress	± 180 °/m
Ambient temperature range (stationary)	-40 °C…+80 °C
Ambient temperature range (In motion)	-40 °C…+80 °C
Drag chain operation	-25 °C…+80 °C

Accessories

TORQUE-WRENCH-SET-AS 6936170



Torque wrench set; handles with adjustable torque 0.4-1.0 Nm, torque wrench for M8 (SW9), fork wrench for M12 (SW 14)

BLANK-LABEL-FOR-CORDSETS-TEL-TXL 6936206

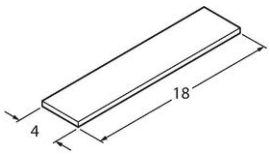

Label for TEL and TXL cables, length: 18 mm, height: 4 mm, material: polycarbonate (PC), color: white, halogen-free and flame-retardant

VBRS4.4-2RKC4.880T-0.15/0.15/TXL4000 05-05-2021 07-36 | Technical modifications reserved