efectorsoo

ifm electronic

Pressure sensors

PK7520

Electronic pressure monitor
PK75

Connector
Process connection G¼ A / M5 I

2 switching outputs

Measuring range
0...400 bar
0...5800 PSI

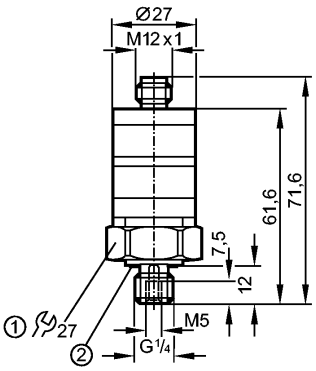

1: tightening torque 25 Nm
2: sealing FPM / DIN 3869-14

Made in Germany

Application		**Type of pressure: relative pressure Liquids and gases**	
Electrical design		**DC PNP**	
Output		**2 x normally open**	
Operating voltage	[V]	9.6...32 DC	
Current rating	[mA]	500	
Short-circuit protection		pulsed	
Reverse polarity protection		yes	
Overload protection		yes	
Voltage drop	[V]	< 2	
Current consumption	[mA]	< 25	
Pressure rating		600 bar	8700 PSI
Bursting pressure min.		1600 bar	23200 PSI
Setting range			
Set point, SP		12...400 bar	174...5800 PSI
Hysteresis		8 bar	116 PSI
Adjustment of the switch point		setting rings	
Deviations (% of value of measuring range)			
Switch point accuracy		< ± 2.5 *)	
Characteristics deviation		< ± 1.5 (BFSL) / < ± 2.5 (LS) **)	
Repeatability		< ± 0.5	
Temperature drift (/ 10 K)		< ± 0.5	
in the temperature range		0...80	

efectorsoo

ifm electronic

PK7520

Switching frequency	[Hz]	100
Ambient temperature	[°C]	-25...80
Medium temperature	[°C]	-25...80
Storage temperature	[°C]	-40...100
Protection		IP 67, III
Insulation resistance	[MΩ]	> 100 (500 V DC)
Shock resistance		DIN IEC 68-2-27: 50 g (11 ms)
Vibration resistance		DIN IEC 68-2-6: 20 g (10...2000 Hz)
Switching cycles min.		50 million
EMC		EN 61000-4-2 ESD: 4 kV CD / 8 kV AD EN 61000-4-3 HF radiated: 10 V/m EN 61000-4-4 Burst: 2 kV EN 61000-4-6 HF conducted: 10 V
MTTF	[Years]	513
Housing materials		PBT (Pocan); PC (Makrolon); FPM (Viton); stainless steel 316L / 1.4404
Materials (wetted parts)		stainless steel 316L / 1.4404; FPM (Viton)
Display		Switching status 2 x LED yellow
Connection		M12 connector
Weight	[kg]	0.095
Remarks		*) Setting accuracy **) BFSL = Best Fit Straight Line / LS = Limit Value Setting

Wiring



