EVF496

Connection cable

VDOGH040VAP0020P04STGH040VAP

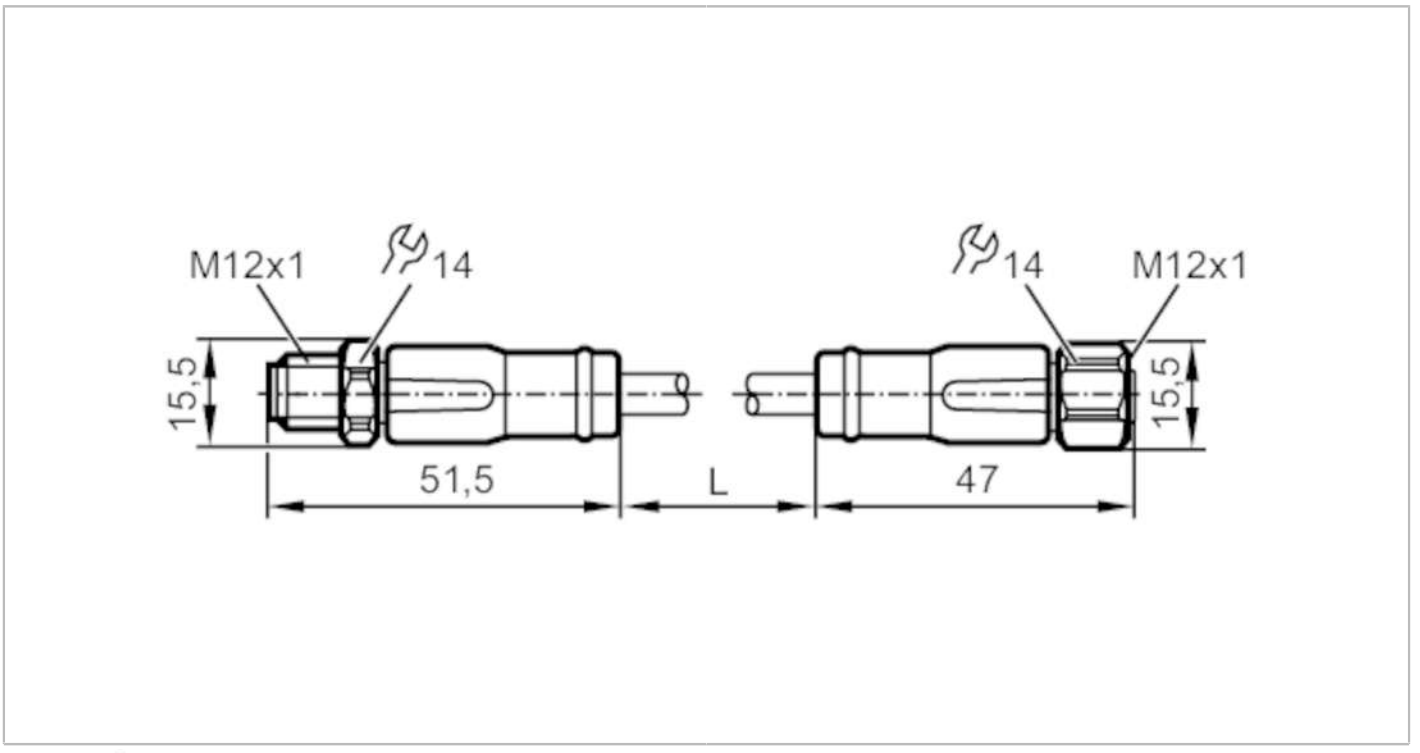

Application		
Special feature		Free from silicone; Halogen-free; Gold-plated contacts; Drag chain suitability
Application		hygienic and wet areas in the food industry
Free from silicone		yes
Electrical data		
Operating voltage	[V]	< 250 AC / < 300 DC
Protection class		II
Max. current load total	[A]	4
Operating conditions		
Ambient temperature	[°C]	-25...100
Ambient temperature (moving)	[°C]	0...100
Storage temperature	[°C]	-25...55
Storage humidity	[%]	10...100
Other climatic conditions for storage according to stated class		1K22/ DIN 60721-3-1
Protection		IP 65; IP 67; IP 68; IP 69K
Mechanical data		
Weight	[g]	1366
Materials		PP Halogen-free; Sealing: EPDM
Moulded-body material		PP
Material nut		stainless steel (1.4404 / 316L)
Drag chain suitability		yes

EVF496

Connection cable

VDOGH040VAP0020P04STGH040VAP

Drag chain suitability	bending radius for flexible use	min. 10 x cable diameter
	travel speed	max. 3.3 m/s for a horizontal travel length of 5 m and max. acceleration of 5 m/s²
	bending cycles	> 1 Mio.
	torsional strain	± 180 °/m

Remarks

Pack quantity	1 pcs.

Electrical connection - plug

Connector: 1 x M12, straight; coding: A; Moulded body: PP; Locking: stainless steel (1.4404 / 316L); Contacts: gold-plated; Tightening torque: 0.6...1.2 Nm



Electrical connection

Cable: 20 m, MPPE, Halogen-free, grey, Ø 6.2 mm; 4 x 1.00 mm² (32 x Ø 0.2 mm)

Connection

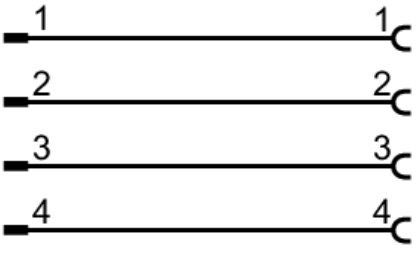

Electrical connection - socket

Connector: 1 x M12, straight; coding: A; Moulded body: PP; Locking: stainless steel (1.4404 / 316L); Contacts: gold-plated; Tightening torque: 0.6...1.5 Nm

