Isolating switching amplifier
2-channel
IM1-231EX-R

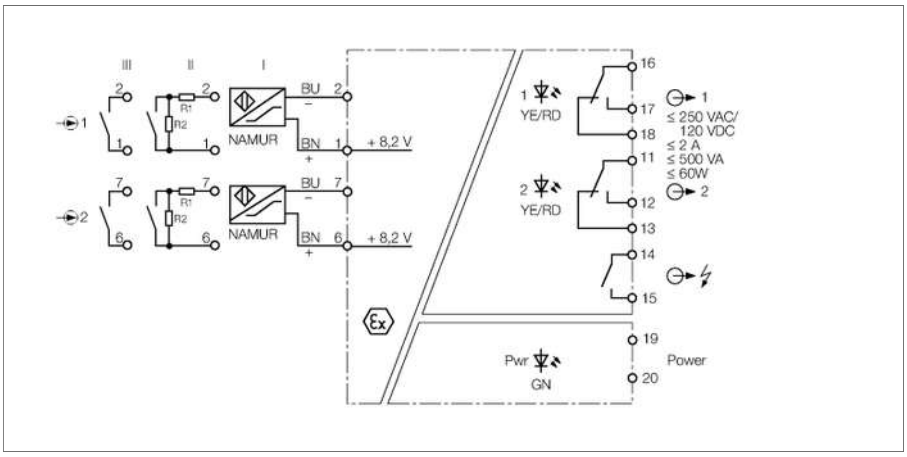

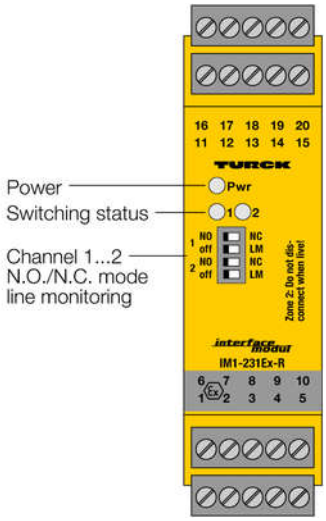

The 2-channel isolating switching amplifier IM1-231EX-R is equipped with intrinsically safe input circuits.

Sensors according to EN 60947-5-6 (NAMUR) can be connected to the device or potential-free contactors.

The output circuits each have a relay with a changeover contact. In addition, the device features a common alarm output.

Four front panel switches are available to set the output mode separately for each channel (NO or NC mode), as well as to enable/disable line monitoring (LM).

When using mechanical contacts, wire-break and short-circuit monitoring must be switched off or the contact must be wired with resistors (II) (see circuit diagram).

The Pwr LED lights green to indicate operational readiness. The 2-color LED lights yellow to indicate the switching status of the associated output. In the event of an input circuit error, the 2-color LED turns red, provided the input circuit monitoring function is activated. Thereupon the output and the alarm relay drop out.

- **ATEX, IECEx, INMETRO, GOST**
- **Installation in zone 2**
- **2 relay outputs (changeover)**
- **Adjustable output mode (NO/NC)**
- **Input circuits monitored for wire-break/ short-circuit (ON/OFF switchable)**
- **Common alarm output**
- **Complete galvanic isolation**

Edition • 2014-03-14T18:04:58+01:00

Hans Turck GmbH & Co.KG ● D-45472 Mülheim an der Ruhr ● Witzlebenstraße 7 ● Tel. 0208 4952-0 ● Fax 0208 4952-264 ● more@turck.com ● www.turck.com

Isolating switching amplifier
2-channel
IM1-231EX-R

Type code	IM1-231EX-R
Ident no.	7541239
Flammability class acc. to UL 94	V-0
Nominal voltage	Universal voltage supply unit
Operating voltage	20…250 VAC
Frequency	40…70 Hz
Operating voltage range	20…125 VDC
Power consumption	≤ 3 W
NAMUR	EN 60947-5-6
No-load voltage	8.2 VDC
Short-circuit current	8.2 mA
Input resistance	1 kΩ
Cable resistance	≤ 50 Ω
Switch-on threshold:	1.55 mA
Switch-off threshold:	1.75 mA
Wire breakage threshold	≤ 0.1 mA
Short-circuit threshold	≥ 6 mA
Output circuits (digital)	2 x relay (change-over)
Relay switching voltage	≤ 250 VAC/120 VDC
Switching current per output	≤ 2 A
Switching capacity per output	≤ 500 VA/60 W
Switching frequency	≤ 10 Hz
Contact quality	AgNi, 3µ Au
Galvanic isolation	
Test voltage	2.5 kV
Ex approval acc. to conformity certificate	TÜV 04 ATEX 2604
Application area	II (1) G, II (1) D
Protection type	[Ex ia Ga] IIC ; [Ex ia Da] IIIC
Max.output voltage U_o	≤ 11.3 V
Max. output current I_o	≤ 13 mA
Max. output power P_o	≤ 36 mW
Characteristic	linear
Rated voltage	250 V
Internal inductance/capacitance L_i/C_i	Li = 100 µH, Ci = 1,1 nF
External inductance/capacitance L_o/C_o	■ removable terminal blocks
Ex approval acc. to conformity certificate	TÜV 06 ATEX 552967 X
Application area	II 3 G
Protection type	Ex nA nC [ic Gc] IIC T4
Max. values:	terminal connection: 1+2 / 4…7 / 9+10
Max.output voltage U_o	≤ 11.3 V
Max. output current I_o	≤ 13 mA
Max. output power P_o	≤ 36 mW
Characteristic	linear
Internal inductance/capacitance L_i/C_i	Li = 100 µH; Ci = 1.1 nF
External inductance/capacitance L_o/C_o	

Ex ic	IIC			IIC		
L_o [mH]	10	5.0	1	20	10.0	2
C_o [µF]	0.91	1.0	1.5	4.3	4.9	6.8

MTTF	150 years acc. to SN 29500 (Ed. 99) 40 °C
Indication	
Operational readiness	green
Switching state	yellow
Error indication	red

Dimensions

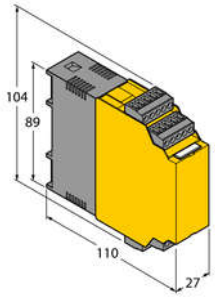

Load curve

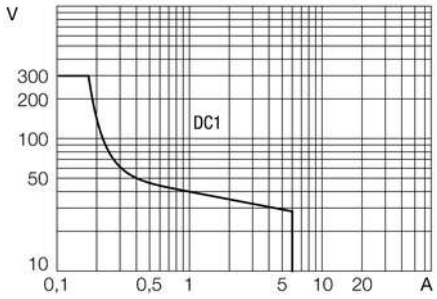

Output relay electrical lifetime

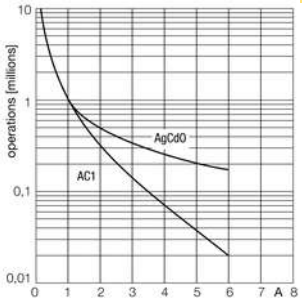

Edition • 2014-03-14T18:04:58+01:00

Isolating switching amplifier
2-channel
IM1-231EX-R

Mechanical Data	
Protection class	IP20
Ambient temperature	-25…+70 °C
Storage temperature	-40…+80°C
Relative humidity	≤ 95%
Dimensions	104 x 27 x 110 mm
Weight	200 g
Mounting instruction	For mounting on DIN rail or mounting panel
Housing material	polycarbonate/ABS
Electrical connection	4 x 5-pole removable terminal blocks, reverse polarity protected, screw connection
Terminal cross-section	1 x 2.5 mm^2 / 2 x 1.5 mm^2
Tightening torque	0.5 Nm

Edition • 2014-03-14T18:04:58+01:00

Isolating switching amplifier
2-channel
IM1-231EX-R

Accessories

Type code	Ident no.	Description	Dimension drawing
IM-CC-5X2BU/2BK	7504031	Cage clamp terminals for IM modules (Ex devices; width 27 mm): 2 blue/2 black, 5-pin	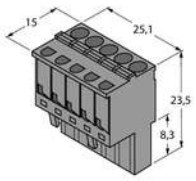

Edition • 2014-03-14T18:04:58+01:00