finder
SWITCH TO THE FUTURE

Panel Thermo-Hygrostat and Thermostats

7T
SERIES

- Drying kilns
- Industrial refrigeration
- Road / tunnel lighting
- Industrial furnaces and ovens
- Automatic car-washes
- Panels for electrical distribution
- Control panels
- Forced-air ventilators



FINDER reserves the right to alter characteristics at any time without notice. FINDER assumes no liability for damage to persons or property, caused as a result of the incorrect use or application of its products.

Panel Thermo-Hygrostat

- Small, compact size (17.5 mm wide)
- Electronic control
- 4 functions
- Nominal voltage 110…240 V AC/DC
- Temperature ranges from +10 ° to +60°C
- Humidity range up to 90%
- LED status indication contact ON
- 35 mm rail (EN 60715) mount

Panel thermostat

- Small, compact size (17.5 mm wide)
- Snap action themostatic Bimetal sensor
- Wide temperature setting range
- Long electrical life
- 35 mm rail (EN 60715) mount

		NEW 7T.51	7T.81.0.000.240x	7T.81.0.000.230x
				
		• Thermo-Hygrostatic control • Nominal voltage 110…240 V AC/DC	• Heating control	• Ventilation control

* Measured with 0.3 K/min
** Measured with 0.5 %/min

For outline drawing see page 6

Contact specification								
Contact configuration		1 NO (SPST-NO)	1 NC (SPST-NC)			1 NO (SPST-NO)		
Rated current/Maximum peak current	A	10/20	10/20			10/20		
Rated voltage/ Maximum switching voltage	V AC	250/250	250/250			250/250		
Rated load AC1	VA	2500	2500			2500		
Rated load AC15 (230 V AC)	VA	250	250			250		
Single phase motor rating AC3 (230 V AC)	kW	1.1	1.1			1.1		
Breaking capacity DC1: 30/110/220 V	A	1/0.3/0.15	1/0.3/0.15			1/0.3/0.15		
Minimum switching load	mW (V/mA)	500 (12/10)	500 (12/10)			500 (12/10)		
Standard contact material		AgNi	AgNi			AgNi		
Coil specifications								
Nominal Voltage	V AC/DC	110…240	—			—		
Rated Power	VA (50Hz)/W	1.8/0.44	—			—		
Operating range	V AC/DC	88…264	—			—		
Temperature specifications *								
Setting range (ventilation)	°C	+10…+60	–20…+40	–20…+60	0…+60	–20…+40	–20…+60	0…+60
Switch differential	K	4 ± 2	7 ± 4			7 ± 4		
Setting accuracy full range	K	–1…+3	—			—		
Humidity specifications **								
Setting range (humidity)	%	50…90	—			—		
Hysteresis	%	4 ± 2	—			—		
Setting accuracy	%	5	—			—		
Technical data								
Electrical life at rated load AC1	cycles	$100 \cdot 10^3$	$100 \cdot 10^3$			$100 \cdot 10^3$		
Ambient temperature range	°C	–25…+60	–45…+80			–45…+80		
Protection category		IP 20	IP 20			IP 20		
Approvals (according to type)		CE EAC cULus	CE EAC 03 cULus					

Ordering information

Example: 7T Series, Thermo-Hygrostat for temperature and humidity control, 110…240 V AC/DC, Multifunction, 35 mm rail (EN 60715) mount.

7 T . 5 1 . 0 . 2 3 0 . 4 3 6 0

Series

Type
5 = Thermo-Hygrostatic control
8 = Temperature control

No. of contacts
1 = 1 contact

Voltage type
0 = AC/DC (only 7T.51)
0 = No operating voltage required (only 7T.81)

Rated operating voltage
230 = 110…240 V (only 7T.51)
000 = No operating voltage required

Control function
60 = Multifunction (only 7T.51)
01 = –20…+40 °C (only 7T.81)
02 = –20…+60 °C (only 7T.81)
03 = 0…+60 °C (only 7T.81)

Contact configuration
3 = 1 NO contact
4 = 1 NC contact

Monitoring function
2 = Temperature control
4 = Temperature and Humidity, adjustable

Technical data

Insulation		7T.51	7T.81
Dielectric strength between open contacts	V AC	1000	500
Dielectric strength between supply and contact	V AC	2000	—
Other data			
Screw torque	Nm	0.5	0.5
Max. wire size		solid cable	stranded cable
	mm²	1 x 2.5	1 x 1.5
	AWG	1 x 12	1 x 16

G

Functions 7T.51

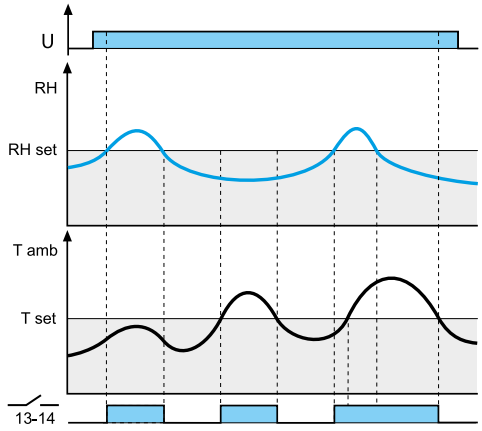

HT: RH > RHset OR Tamb > Tset

Power is permanentely applied to the thermo-hygrostat.
The contact 13-14 closes if the ambient humidity (RH) is > of set humidity (RHset) OR if the ambient temperature (Tamb) is > of set temperature (Tset).

When contact is close, LED is ON

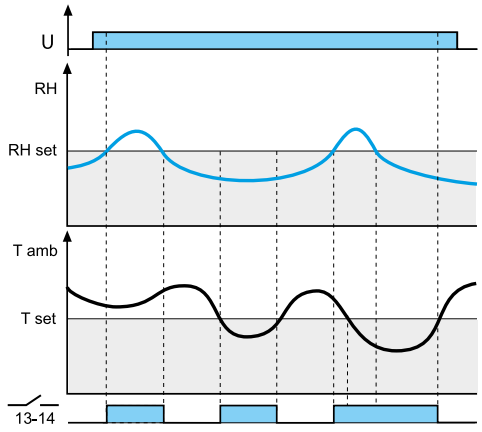

TH: RH > RHset OR Tamb < Tset

The contact 13-14 closes if the ambient humidity (RH) is > of set humidity (RHset) OR if the ambient temperature (Tamb) is < of set temperature (Tset).

When contact is close, LED is ON

IV-2021, www.findernet.com

Functions 7T.51

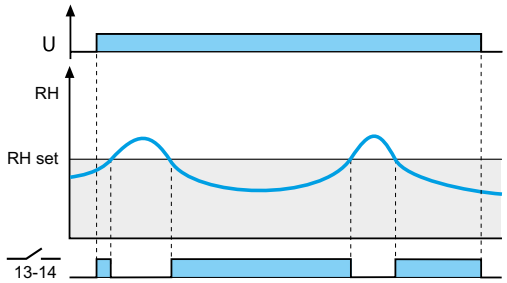

HL: RH < RHset

The contact 13-14 closes if the ambient humidity (RH) is < of set humidity (RHset)

When contact is close, LED is ON

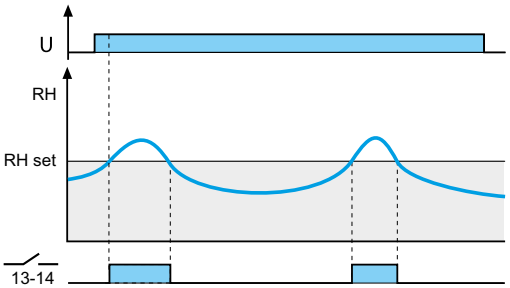

HM: RH > RHset

The contact 13-14 closes if the ambient humidity (RH) is > of set humidity (RHset)

When contact is close, LED is ON

Functions 7T.81

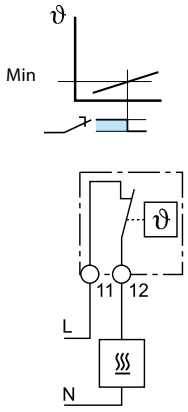

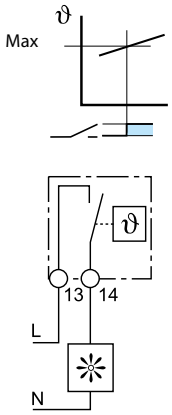

Heating control - Should the panel temperature fall below the (minimum) set temperature the contact will close to call for heat.
The contact will open when this set temperature is exceeded.
Ventilation control - Should the panel temperature exceed the (maximum) set temperature then the contact will close to call for cooling.
The contact will open when the temperature falls below this set temperature.

G

Wiring diagrams

7T.51

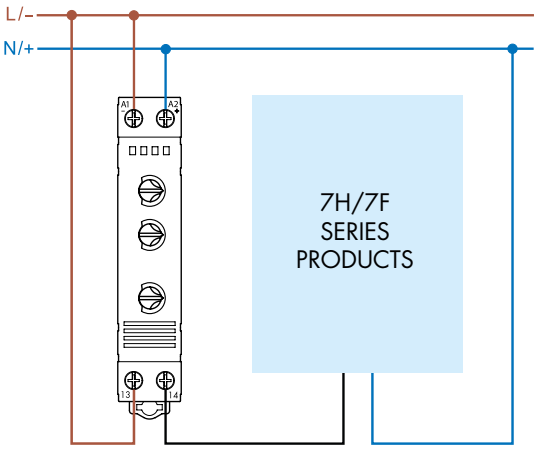

7T.81…230x

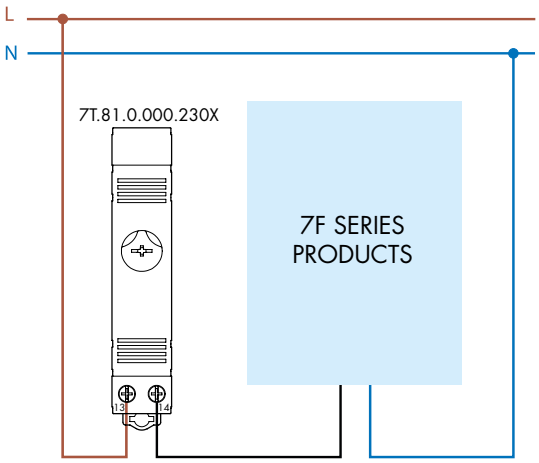

7T.81…240x

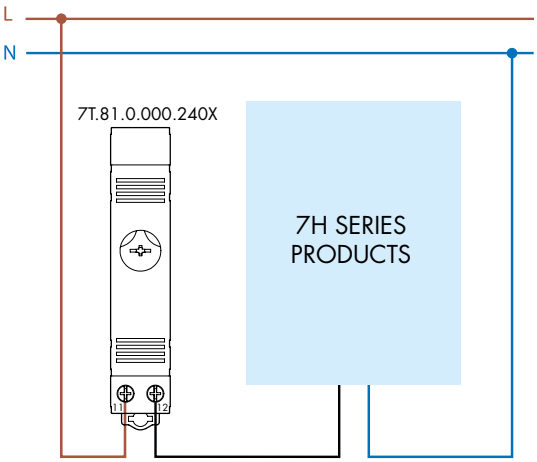

Outline drawings

Type 7T.51

Screw terminal



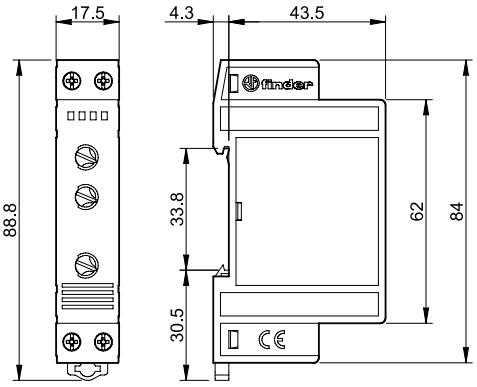

Type 7T.81

Screw terminal



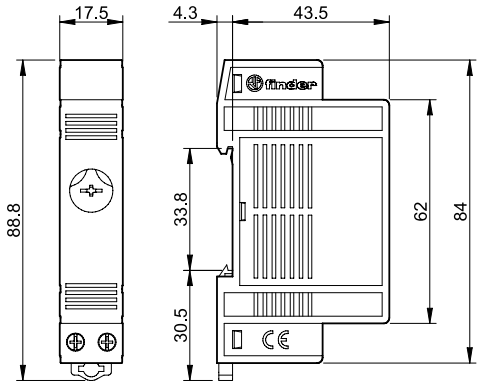

Please see general technical information