5000 SERIES - MINIATURE TOGGLE SWITCHES

SPECIFICATIONS SUBJECT TO CHANGE WITHOUT NOTICE



FEATURES

- **Broadest selection offered in miniature switches.**
- **SPDT, DPDT, 3PDT & 4PDT models with numerous options.**
- **Numerous configurations for panel, panel & p.c. and p.c. mounting.**
- **Extensive agency recognition (see below).**

SPECIFICATIONS

Contact ratings (resistive loads):	Gold plated brass; 0.4 Volt-Amps max. at 20 V max. Silver; 3 Amps at 250 VAC, 6 Amps at 125 VAC or 4 Amps at 30 VDC Gold plated silver; 3 Amps at 250 VAC, 6 Amps at 125 VAC or 4 Amps at 30 VDC. Gold plating withstands up to 100 mA at 30 VDC.
Initial contact resistance:	10 milliohms maximum
Insulation resistance:	1000 megohms min. at 500 VDC
Dielectric strength:	1000 V rms min. - between terminals 1500 V rms min. - between poles and terminals and frame
Electrical life:	Gold: 100,000 cycles min. Silver (at full load): SP & DP - 50,000 cycles min. 3P: 40,000 cycles min. 4P: 30,000 cycles min.
Operating temperature range:	-40°C to +85°C

MATERIALS

Contacts & Terminals:	Gold plated brass, silver or gold plated silver
Actuator:	Chrome plated brass
Bushing:	Nickel plated brass
Housing:	Stainless steel or tin plated steel
Case:	Diallyl phthalate (DAP)
Terminal seal:	Epoxy
Hardware:	Panel mounting models supplied with 2 Hex Nuts .314" (8mm) across flats, 1 Locking Ring & 1 Lockwasher. See hardware section of catalog.

AGENCY RECOGNITION

UL, CSA, CECC, LNZ, GAM T1, QPL (Europe), MUAHAG, NATO. Availability: Consult factory for details of recognized models. Marking: To order switches marked UL, CSA or CECC, complete the appropriate box of the ordering format. Other listings do not appear on the switches.

ABOUT THIS SERIES

The material in this series is organized in the following sequence:

a. Completely specified switch models:
   - Panel mounting
   - Panel and/or p.c. mounting
   - P.C. mounting

b. 'build your own switch' order format

c. Option drawings & special options

d. Panel cut-outs & miscellaneous

ALSO IN THIS SERIES

5000 Series switches for peak currents - for switching power supplies, DC-DC converters, motors, etc. See specifications on last page of completely specified models.

VDE approved 5000 Series models - see 55000 Series following.

5000 SERIES - MINIATURE TOGGLE SWITCHES

Single pole - standard actuator - 1/4-40 threaded bushing - solder lug terminals - silver contacts



MODEL NO.	CIRCUIT		
5636AB	ON	-	ON
5639AB	ON	OFF	ON
5637AB	MOM	OFF	MOM
5638AB	ON	OFF	MOM
5632AB	ON	-	MOM
Handle position (see dwg.) :	III	II	I
Terminals connected	2-3		1-2

→ Keyway

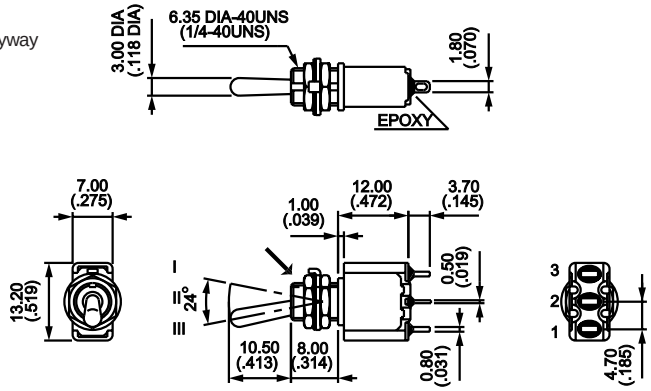

Double pole - standard actuator - 1/4-40 threaded bushing - solder lug terminals - silver contacts



MODEL NO.	CIRCUIT		
5646AB	ON	-	ON
5649AB	ON	OFF	ON
5647AB	MOM	OFF	MOM
5648AB	ON	OFF	MOM
5642AB	ON	-	MOM
5644THAB*	ON	ON	ON
5644TH1RAB*	ON	ON	MOM
5644TH2RAB*	MOM	ON	MOM
Handle position (see dwg.) :	III	II	I
Terminals connected:	2-3		1-2
	5-6		4-5

* Function 4: SP in DP case. see diagram at end of section

→ Keyway

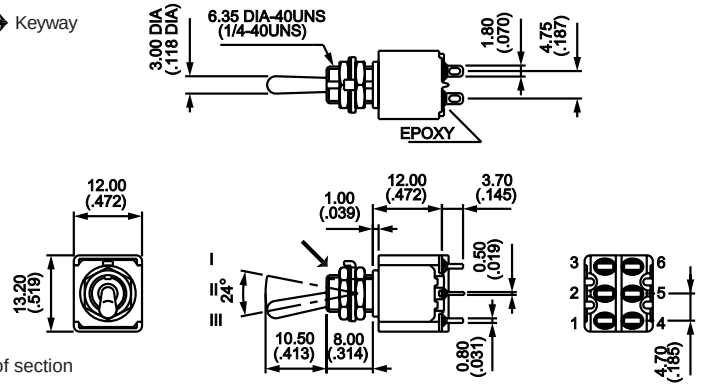

Three pole - standard actuator - 1/4-40 threaded bushing - solder lug terminals - silver contacts



MODEL NO.	CIRCUIT		
5656AB	ON	-	ON
5659AB	ON	OFF	ON
5657AB	MOM	OFF	MOM
5658AB	ON	OFF	MOM
5652AB	ON	-	MOM
Handle position (see dwg.) :	III	II	I
Terminals connected:	2-3		1-2
	5-6		4-5
	8-9		7-8

→ Keyway

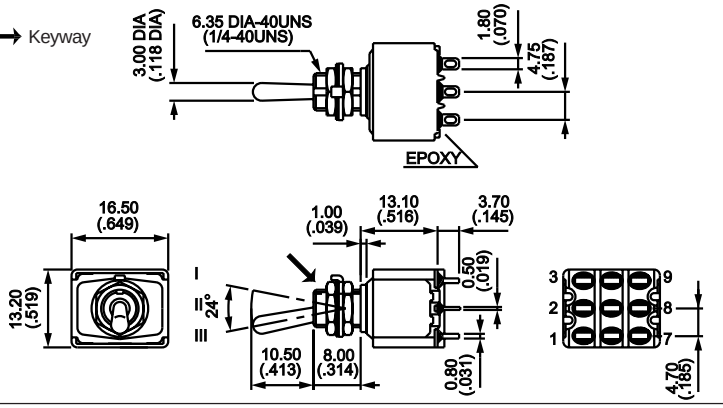

Four pole - standard actuator - 1/4-40 threaded bushing - solder lug terminals -silver contacts



MODEL NO.	CIRCUIT		
5666AB	ON	-	ON
5669AB	ON	OFF	ON
5667AB	MOM	OFF	MOM
5668AB	ON	OFF	MOM
5662AB	ON	-	MOM
5664THAB*	ON	ON	ON
5664TH1RAB*	ON	ON	MOM
5664TH2RAB*	MOM	ON	MOM
Handle position	III	II	I
Terminals connected:	2-3		1-2
	5-6		4-5
	8-9		7-8
	11-12		10-11

* Function 4: SP in DP case. see diagram at end of section.

→ Keyway

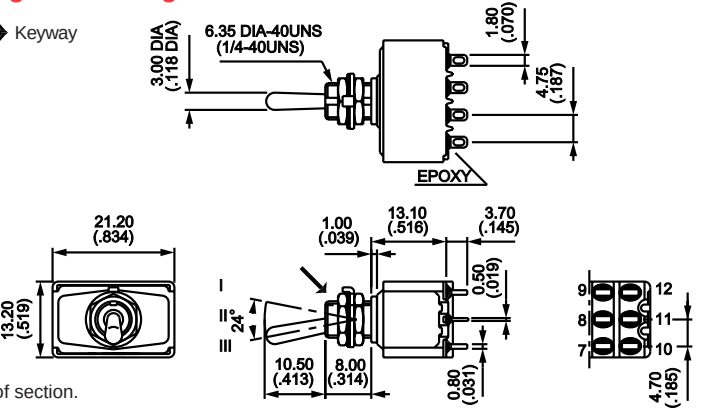

SPECIFICATIONS SUBJECT TO CHANGE WITHOUT NOTICE

5000 SERIES - MINIATURE TOGGLE SWITCHES

SPECIFICATIONS SUBJECT TO CHANGE WITHOUT NOTICE

Single pole - flatted actuator - 1/4-40 threaded bushing - solder lug terminals - silver contacts



MODEL NO.	CIRCUIT		
5636AB9	ON	-	ON
5639AB9	ON	OFF	ON
5637AB9	MOM	OFF	MOM
5638AB9	ON	OFF	MOM
5632AB9	ON	-	MOM
Handle position (see dwg.) :	III	II	I
Terminals connected	2-3		1-2

→ Keyway

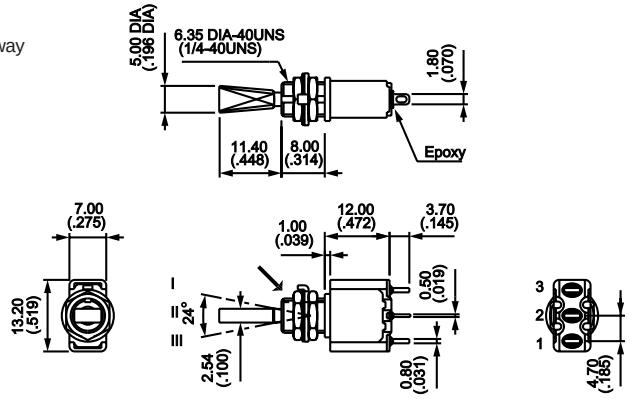

Double pole - flatted actuator - 1/4-40 threaded bushing - solder lug terminals - silver contacts



MODEL NO.	CIRCUIT		
5646AB9	ON	-	ON
5649AB9	ON	OFF	ON
5647AB9	MOM	OFF	MOM
5648AB9	ON	OFF	MOM
5642AB9	ON	-	MOM
5644THAB9*	ON	ON	ON
5644TH1RAB9*	ON	ON	MOM
5644TH2RAB9*	MOM	ON	MOM
Handle position:	III	II	I
Terminals connected:	2-3		1-2
	5-6		4-5

* Function 4: SP in DP case. see diagram at end of section.

→ Keyway

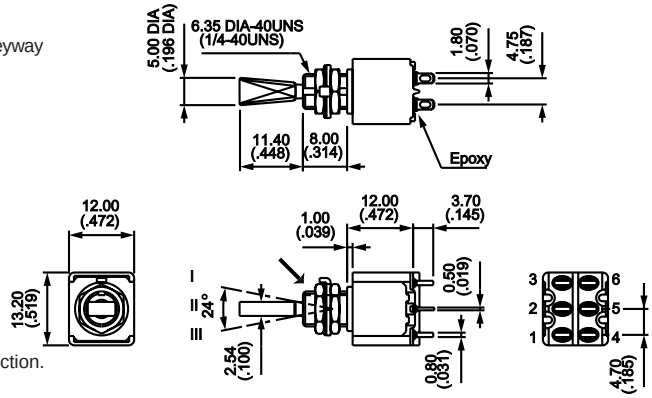

Three pole - flatted actuator - 1/4-40 threaded bushing - solder lug terminals - silver contacts



MODEL NO.	CIRCUIT		
5656AB9	ON	-	ON
5659AB9	ON	OFF	ON
5657AB9	MOM	OFF	MOM
5658AB9	ON	OFF	MOM
5652AB9	ON	-	MOM
Handle position (see dwg.) :	III	II	I
Terminals connected:	2-3		1-2
	5-6		4-5
	8-9		7-8

→ Keyway

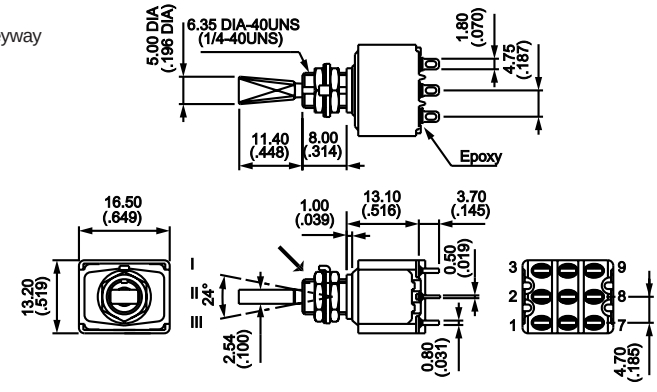

Four pole - flatted actuator - 1/4-40 threaded bushing - solder lug terminals - silver contacts



MODEL NO.	CIRCUIT		
5666AB9	ON	-	ON
5669AB9	ON	OFF	ON
5667AB9	MOM	OFF	MOM
5668AB9	ON	OFF	MOM
5662AB9	ON	-	MOM
5664THAB9*	ON	ON	ON
5664TH1RAB9*	ON	ON	MOM
5664TH2RAB9*	MOM	ON	MOM
Handle position	III	II	I
Terminals connected:	2-3		1-2
	5-6		4-5
	8-9		7-8
	11-12		10-11

* Function 4: SP in DP case. see diagram at end of section.

→ Keyway

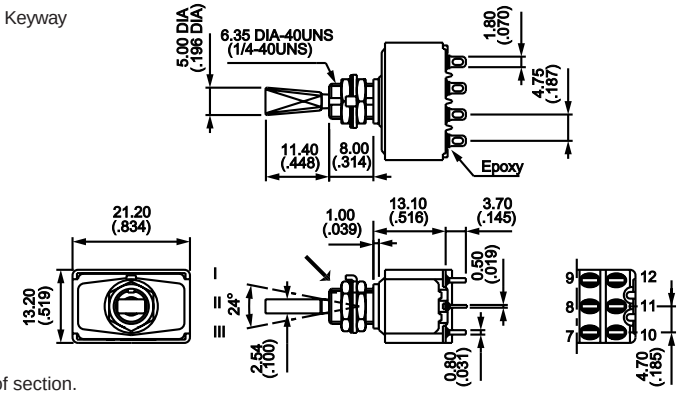

5000 SERIES - MINIATURE TOGGLE SWITCHES

Single pole - standard actuator - 1/4-40 threaded bushing - quick connect terminals - silver contacts



MODEL NO.	CIRCUIT		
5236ZA	ON	-	ON
5239ZA	ON	OFF	ON
5237ZA	MOM	OFF	MOM
5238ZA	ON	OFF	MOM
5232ZA	ON	-	MOM
Handle position (see dwg.) :	III	II	I
Terminals connected:	2-3		1-2

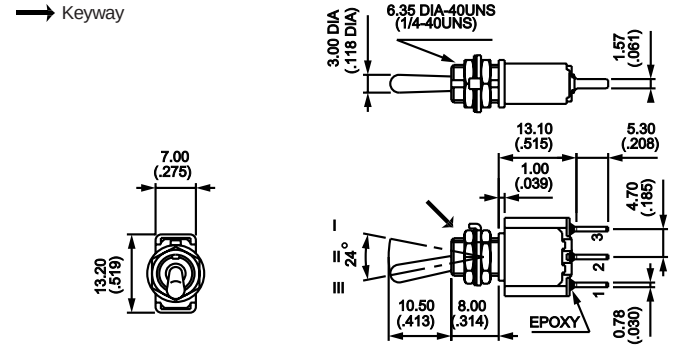

Double pole - standard actuator - 1/4-40 threaded bushing - quick connect terminals - silver contacts



MODEL NO.	CIRCUIT		
5246ZA	ON	-	ON
5249ZA	ON	OFF	ON
5247ZA	MOM	OFF	MOM
5248ZA	ON	OFF	MOM
5242ZA	ON	-	MOM
5244THZA*	ON	ON	ON
5244TH1RZA*	ON	ON	MOM
5244TH2RZA*	MOM	ON	MOM
Handle position	III	II	I
Terminals connected:	2-3 5-6		1-2 4-5

* Function 4: SP in DP case. see diagram at end of section.

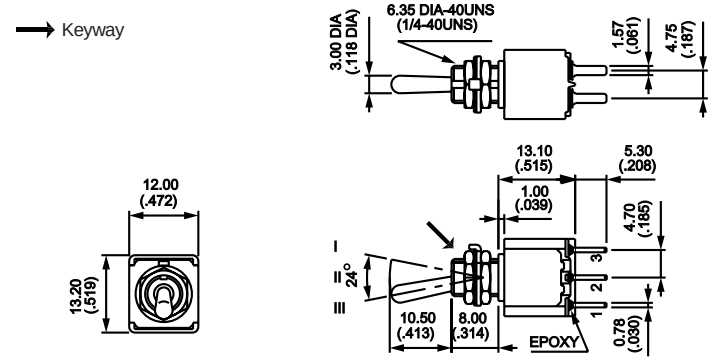

Single pole - large actuator - 15/32-32 threaded bushing - solder lug terminals - silver contacts



MODEL NO.	CIRCUIT		
5636MAB	ON	-	ON
5639MAB	ON	OFF	ON
5637MAB	MOM	OFF	MOM
5638MAB	ON	OFF	MOM
5632MAB	ON	-	MOM
Handle position (see dwg.) :	III	II	I
Terminals connected:	2-3		1-2

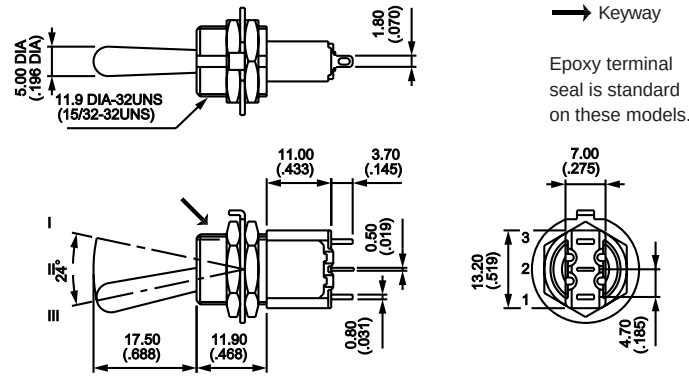

Keyway

Epoxy terminal seal is standard on these models.

Double pole - large actuator - 15/32-32 threaded bushing - solder lug terminals - silver contacts



MODEL NO.	CIRCUIT		
5646MAB	ON	-	ON
5649MAB	ON	OFF	ON
5647MAB	MOM	OFF	MOM
5648MAB	ON	OFF	MOM
5642MAB	ON	-	MOM
5644MTHAB*	ON	ON	ON
5644MTH1RAB*	ON	ON	MOM
5644MTH2RAB*	MOM	ON	MOM
Handle position	III	II	I
Terminals connected:	2-3 5-6		1-2 4-5

* Function 4: SP in DP case. see diagram at end of section.

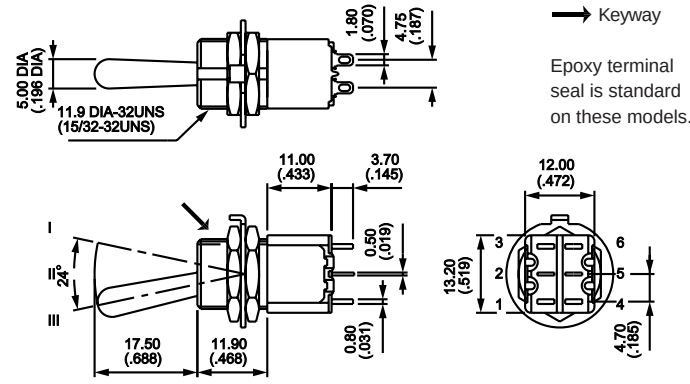

Keyway

Epoxy terminal seal is standard on these models.

SPECIFICATIONS SUBJECT TO CHANGE WITHOUT NOTICE

5000 SERIES - MINIATURE TOGGLE SWITCHES

SPECIFICATIONS SUBJECT TO CHANGE WITHOUT NOTICE

Three pole - large actuator - 15/32-32 threaded bushing - solder lug terminals - silver contacts



MODEL NO.	CIRCUIT		
5656MAB	ON	-	ON
5659MAB	ON	OFF	ON
5657MAB	MOM	OFF	MOM
5658MAB	ON	OFF	MOM
5652MAB	ON	-	MOM
Handle position (see dwg.) :	III	II	I
Terminals connected:	2-3		1-2
	5-6		4-5
	8-9		7-8

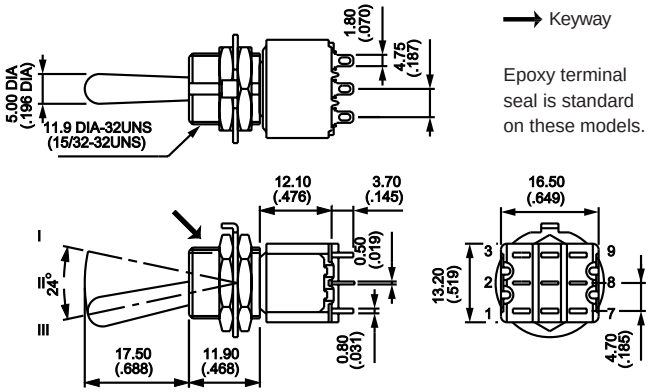

Four pole - large actuator - 15/32-32 threaded bushing - solder lug terminals - silver contacts



MODEL NO.	CIRCUIT		
5666MAB	ON	-	ON
5669MAB	ON	OFF	ON
5667MAB	MOM	OFF	MOM
5668MAB	ON	OFF	MOM
5662MAB	ON	-	MOM
5664MTHAB*	ON	ON	ON
5664MTH1RAB*	ON	ON	MOM
5664MTH2RAB*	MOM	ON	MOM
Handle position	III	II	I
Terminals connected:	2-3		1-2
	5-6		4-5
	8-9		7-8
	11-12		10-11

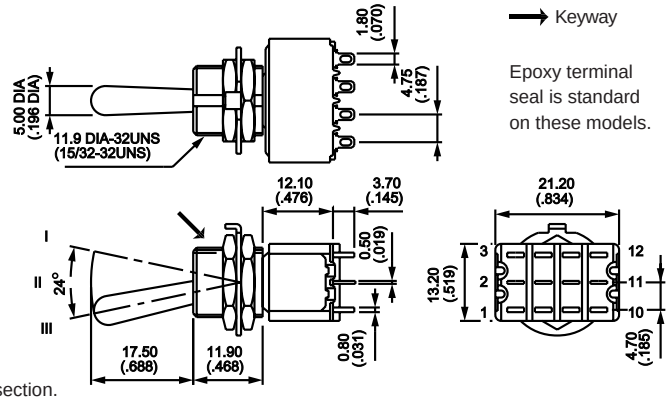

* Function 4: SP in DP case. see diagram at end of section.

Single pole - standard actuator - 1/4-40 splashproof bushing - solder lug terminals - silver contacts



MODEL NO.	CIRCUIT		
5636AKB	ON	-	ON
5639AKB	ON	OFF	ON
5637AKB	MOM	OFF	MOM
5638AKB	ON	OFF	MOM
5632AKB	ON	-	MOM
Handle position (see dwg.) :	III	II	I
Terminals connected:	2-3		1-2

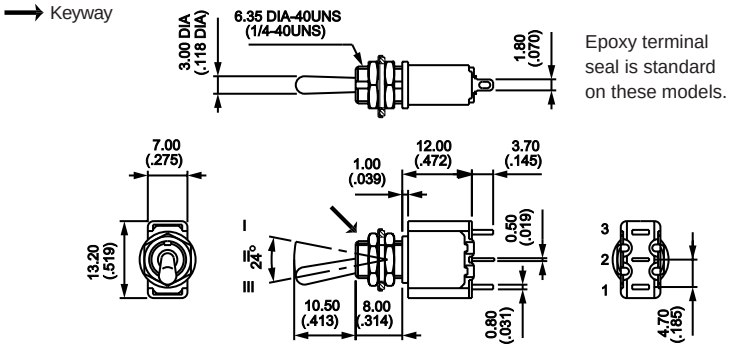

Double pole - standard actuator - 1/4-40 splashproof bushing - solder lug terminals - silver contacts



MODEL NO.	CIRCUIT		
5646AKB	ON	-	ON
5649AKB	ON	OFF	ON
5647AKB	MOM	OFF	MOM
5648AKB	ON	OFF	MOM
5642AKB	ON	-	MOM
5644THAKB*	ON	ON	ON
5644TH1RAKB*	ON	ON	MOM
5644TH2RAKB*	MOM	ON	MOM
Handle position:	III	II	I
Terminals connected:	2-3		1-2
	5-6		4-5

* Function 4: SP in DP case. see diagram at end of section.

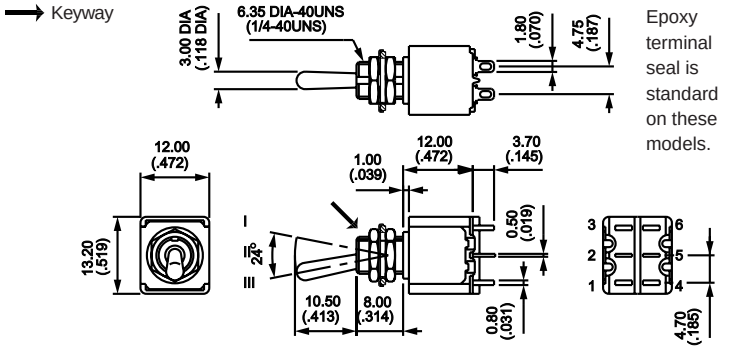

5000 SERIES - MINIATURE TOGGLE SWITCHES

Three pole - standard actuator - 1/4-40 splashproof bushing - solder lug terminals - silver contacts



MODEL NO.	CIRCUIT		
5656AKB	ON	-	ON
5659AKB	ON	OFF	ON
5657AKB	MOM	OFF	MOM
5658AKB	ON	OFF	MOM
5652AKB	ON	-	MOM
Handle position (see dwg.) :	III	II	I
Terminals connected:	2-3		1-2
	5-6		4-5
	8-9		7-8

→ Keyway

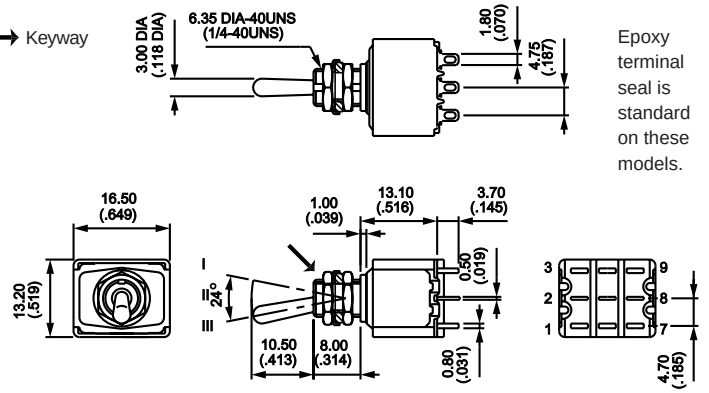

Epoxy terminal seal is standard on these models.

Four pole - standard actuator - 1/4-40 splashproof bushing - solder lug terminals - silver contacts



MODEL NO.	CIRCUIT		
5666AKB	ON	-	ON
5669AKB	ON	OFF	ON
5667AKB	MOM	OFF	MOM
5668AKB	ON	OFF	MOM
5662AKB	ON	-	MOM
5664THAKB*	ON	ON	ON
5664TH1RAKB*	ON	ON	MOM
5664TH2RAKB*	MOM	ON	MOM
Handle position:	III	II	I
Terminals connected:	2-3		1-2
	5-6		4-5
	8-9		7-8
	11-12		10-11

→ Keyway

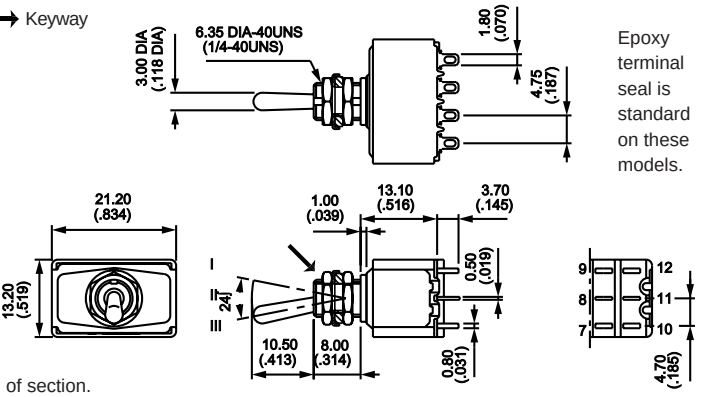

Epoxy terminal seal is standard on these models.

* Function 4: SP in DP case. see diagram at end of section.

Single pole - locking actuator - 1/4-40 threaded bushing - solder lug terminals - silver contacts



MODEL NO.	CIRCUIT		
1 locked position			
5636AB-1V	ON	-	ON
2 locked positions			
5636AB-2V	ON	-	ON
3 locked positions			
5639AB-3V	ON	OFF	ON
Handle position (see dwg.) :	III	II	I
Terminals connected:	2-3		1-2

→ Keyway

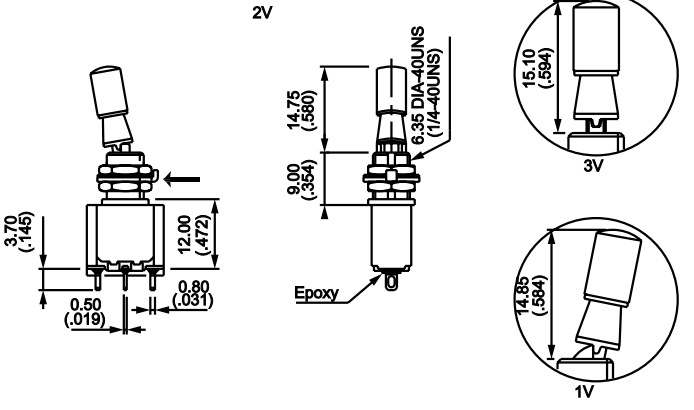

Double pole - locking actuator - 1/4-40 threaded bushing - solder lug terminals - silver contacts



MODEL NO.	CIRCUIT		
1 locked position			
5646AB-1V	ON	-	ON
2 locked positions			
5646AB-2V	ON	-	ON
3 locked positions			
5649AB-3V	ON	OFF	ON
Handle position (see dwg.) :	III	II	I
Terminals connected:	2-3		1-2
	5-6		4-5

→ Keyway

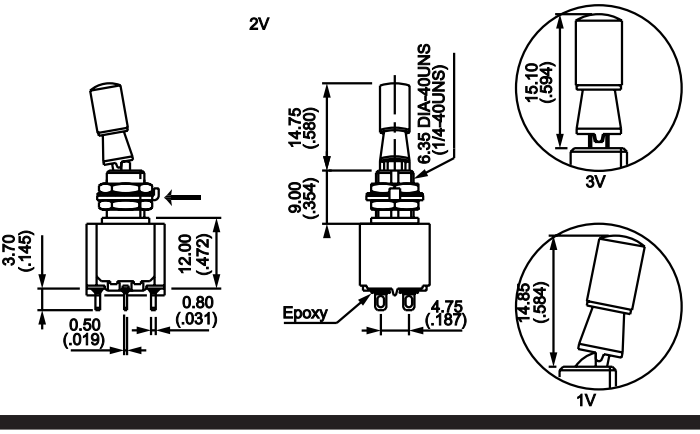

SPECIFICATIONS SUBJECT TO CHANGE WITHOUT NOTICE

5000 SERIES - MINIATURE TOGGLE SWITCHES

SPECIFICATIONS SUBJECT TO CHANGE WITHOUT NOTICE

Three pole - locking actuator - 1/4-40 threaded bushing - solder lug terminals - silver contacts



MODEL NO.	CIRCUIT		
1 locked position			
5656AB-1V	ON	-	ON
2 locked positions			
5656AB-2V	ON	-	ON
3 locked positions			
5659AB-3V	ON	OFF	ON
Handle position (see dwg.) :	III	II	I
Terminals connected:	2-3		1-2
	5-6		4-5
	8-9		7-8

→ Keyway

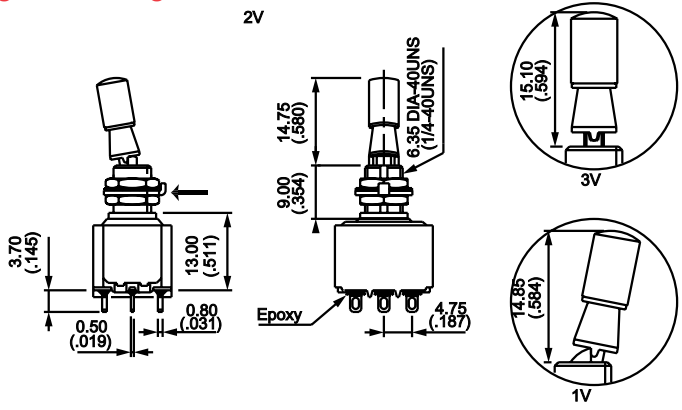

Four pole - locking actuator - 1/4-40 threaded bushing - solder lug terminals - silver contacts



MODEL NO.	CIRCUIT		
1 locked position			
5666AB-1V	ON	-	ON
2 locked positions			
5666AB-2V	ON	-	ON
3 locked positions			
5669AB-3V	ON	OFF	ON
Handle position (see dwg.) :	III	II	I
Terminals connected:	2-3		1-2
	5-6		4-5
	8-9		7-8
	11-12		10-11

→ Keyway

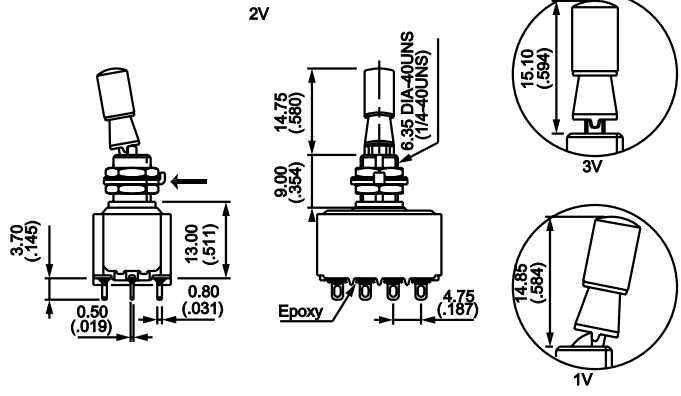

Single pole - standard actuator - 1/4-40 threaded bushing - straight p.c. terminals - gold contacts



MODEL NO.	CIRCUIT		
5236CDB	ON	-	ON
5239CDB	ON	OFF	ON
5237CDB	MOM	OFF	MOM
5238CDB	ON	OFF	MOM
5232CDB	ON	-	MOM
Handle position (see dwg.) :	III	II	I
Terminals connected:	2-3		1-2

→ Keyway

Epoxy terminal seal is standard on these models.

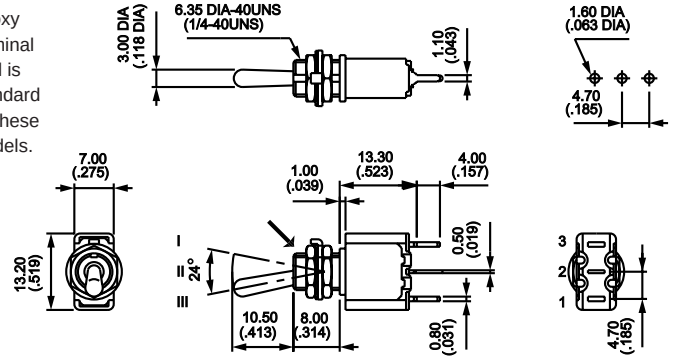

Double pole - standard actuator - 1/4-40 threaded bushing - straight p.c. terminals - gold contacts



MODEL NO.	CIRCUIT		
5246CDB	ON	-	ON
5249CDB	ON	OFF	ON
5247CDB	MOM	OFF	MOM
5248CDB	ON	OFF	MOM
5242CDB	ON	-	MOM
5244THCDB*	ON	ON	ON
5244TH1RCDB*	ON	ON	MOM
5244TH2RCDB*	MOM	ON	MOM
Handle position:	III	II	I
Terminals connected:	2-3		1-2
	5-6		4-5

* Function 4: SP in DP case. see diagram at end of section.

→ Keyway

Epoxy terminal seal is standard on these models.

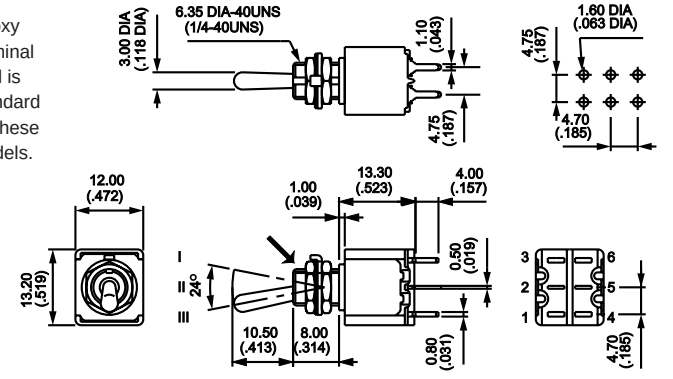

5000 SERIES - MINIATURE TOGGLE SWITCHES

Three pole - standard actuator - 1/4-40 threaded bushing - straight p.c. terminals - gold contacts



MODEL NO.	CIRCUIT		
5256CDB	ON	-	ON
5259CDB	ON	OFF	ON
5257CDB	MOM	OFF	MOM
5258CDB	ON	OFF	MOM
5252CDB	ON	-	MOM
Handle position (see dwg.) :	III	II	I
Terminals connected:	2-3		1-2
	5-6		4-5
	8-9		7-8

→ Keyway

Epoxy terminal seal is standard on these models.

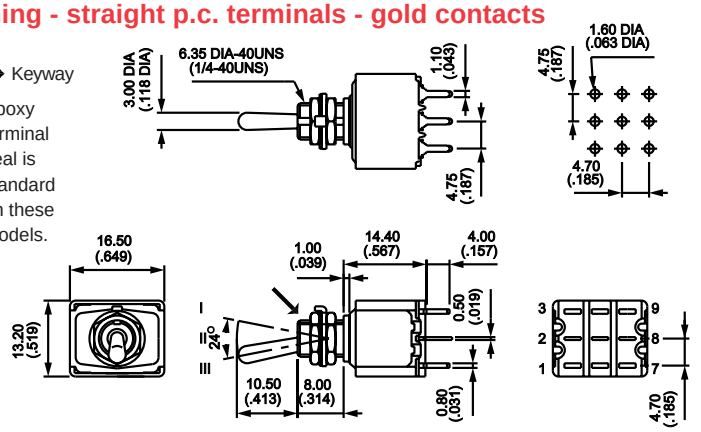

Four pole - standard actuator - 1/4-40 threaded bushing - straight p.c. terminals - gold contacts



MODEL NO.	CIRCUIT		
5266CDB	ON	-	ON
5269CDB	ON	OFF	ON
5267CDB	MOM	OFF	MOM
5268CDB	ON	OFF	MOM
5262CDB	ON	-	MOM
5264THCDB*	ON	ON	ON
5264TH1RCDB*	ON	ON	MOM
5264TH2RCDB*	MOM	ON	MOM
Handle position	III	II	I
Terminals connected:	2-3		1-2
	5-6		4-5
	8-9		7-8
	11-12		10-11

→ Keyway

Epoxy terminal seal is standard on these models.

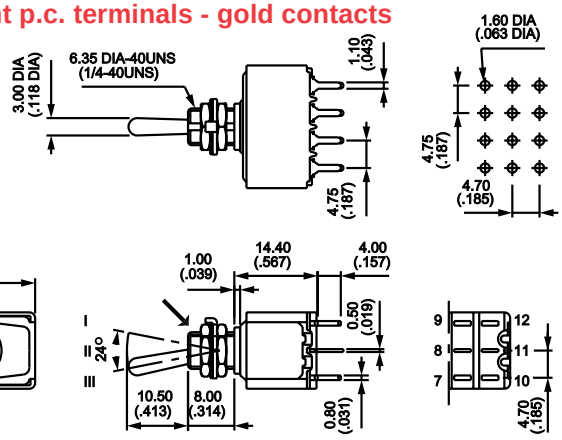

* Function 4: SP in DP case. see diagram at end of section.

Single pole - standard actuator - 1/4-40 threaded bushing - wire-wrap terminals - gold contacts



MODEL NO.	CIRCUIT		
5236MIWRCD	ON	-	ON
5239MIWRCD	ON	OFF	ON
5237MIWRCD	MOM	OFF	MOM
5238MIWRCD	ON	OFF	MOM
5232MIWRCD	ON	-	MOM
Handle position (see dwg.) :	III	II	I
Terminals connected:	2-3		1-2

→ Keyway

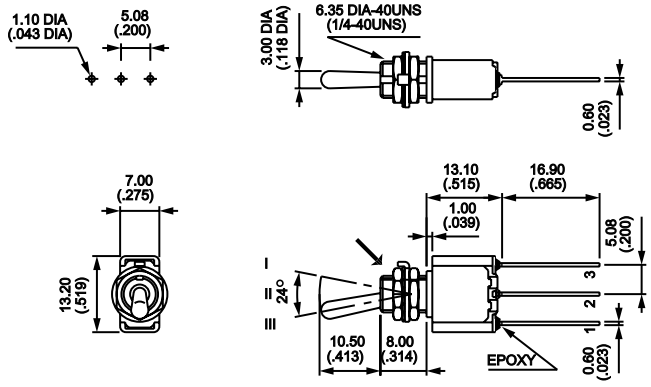

Double pole - standard actuator - 1/4-40 threaded bushing - wire-wrap terminals - gold contacts



MODEL NO.	CIRCUIT		
5246MIWRCD	ON	-	ON
5249MIWRCD	ON	OFF	ON
5247MIWRCD	MOM	OFF	MOM
5248MIWRCD	ON	OFF	MOM
5242MIWRCD	ON	-	MOM
5244MIWRTHCD*	ON	ON	ON
5244MIWRTH1RCD*	ON	ON	MOM
5244MIWRTH2RCD*	MOM	ON	MOM
Handle position:	III	II	I
Terminals connected:	2-3		1-2
	5-6		4-5

* Function 4: SP in DP case. see diagram at end of section.

→ Keyway

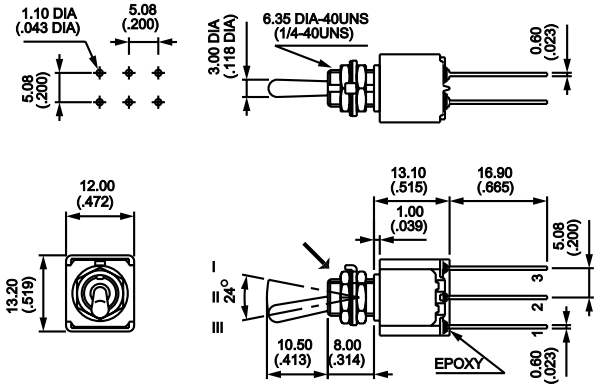

SPECIFICATIONS SUBJECT TO CHANGE WITHOUT NOTICE

5000 SERIES - MINIATURE TOGGLE SWITCHES

SPECIFICATIONS SUBJECT TO CHANGE WITHOUT NOTICE

Single pole - short actuator - 1/4" smooth bushing - horizontal right angle p.c. terminals - gold contacts



MODEL NO.	CIRCUIT		
5236WCDB16X404	ON	-	ON
5239WCDB16X404	ON	OFF	ON
5237WCDB16X404	MOM	OFF	MOM
5238WCDB16X404	ON	OFF	MOM
5232WCDB16X404	ON	-	MOM
Handle position (see dwg.) :	III	II	I
Terminals connected:	2-3		1-2

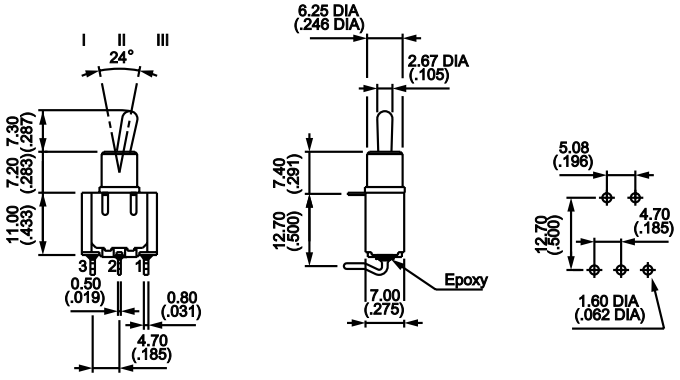

Double pole - short actuator - 1/4" smooth bushing - horizontal right angle p.c. terminals - gold contacts



MODEL NO.	CIRCUIT		
5246WCDB16X404	ON	-	ON
5249WCDB16X404	ON	OFF	ON
5247WCDB16X404	MOM	OFF	MOM
5248WCDB16X404	ON	OFF	MOM
5242WCDB16X404	ON	-	MOM
5244WTHCDB16X404*	ON	ON	ON
5244WTH1RCDB16X404*	ON	ON	MOM
5244WTH2RCDB16X404*	MOM	ON	MOM
Handle position:	III	II	I
Terminals connected:	2-3		1-2
	5-6		4-5

* Function 4: SP in DP case. see diagram at end of section.

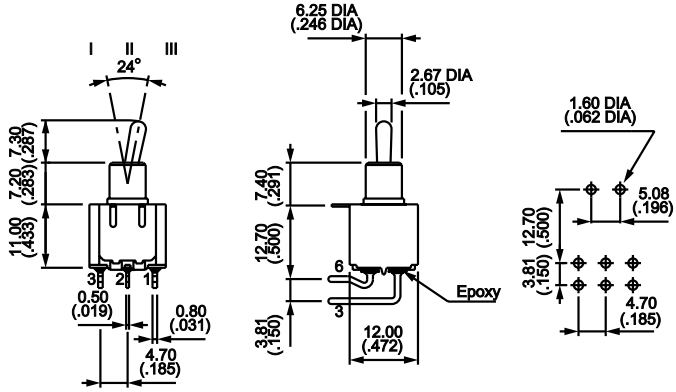

Three pole - short actuator - 1/4" smooth bushing - horizontal right angle p.c. terminals - gold contacts



MODEL NO.	CIRCUIT		
5256WCDB16	ON	-	ON
5259WCDB16	ON	OFF	ON
5257WCDB16	MOM	OFF	MOM
5258WCDB16	ON	OFF	MOM
5252WCDB16	ON	-	MOM
Handle position (see dwg.) :	III	II	I
Terminals connected:	2-3		1-2
	5-6		4-5
	8-9		7-8

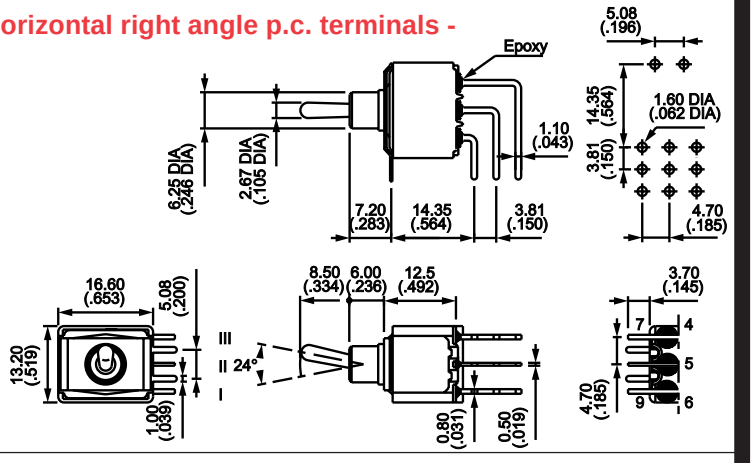

Single pole - short actuator - 1/4" smooth bushing - vertical right angle p.c. terminals - gold contacts



MODEL NO.	CIRCUIT		
5236WWCDB16X445	ON	-	ON
5239WWCDB16X445	ON	OFF	ON
5237WWCDB16X445	MOM	OFF	MOM
5238WWCDB16X445	ON	OFF	MOM
5232WWCDB16X445	ON	-	MOM
Handle position (see dwg.):	III	II	I
Terminals connected:	2-3		1-2

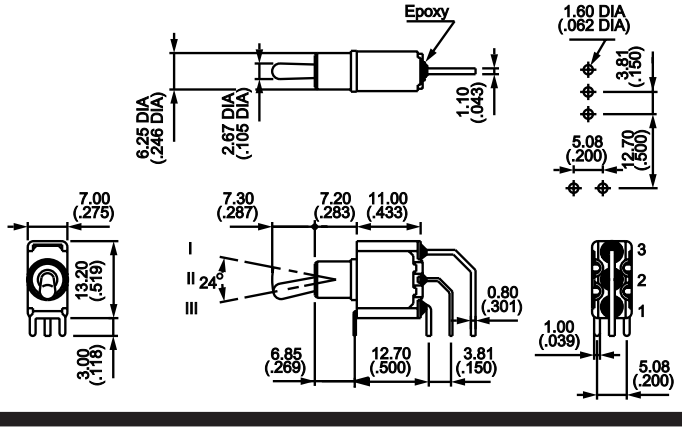

5000 SERIES - MINIATURE TOGGLE SWITCHES

Double pole - short actuator - 1/4" smooth bushing - vertical right angle p.c. terminals - gold contacts



MODEL NO.	CIRCUIT		
5246WWCDB16X445	ON	-	ON
5249WWCDB16X445	ON	OFF	ON
5247WWCDB16X445	MOM	OFF	MOM
5248WWCDB16X445	ON	OFF	MOM
5242WWCDB16X445	ON	-	MOM
5244WWTHCDB16X445*	ON	ON	ON
5244WWTH1RCDB16X445*	ON	ON	MOM
5244WWTH2RCDB16X445*	MOM	ON	MOM
Handle position:	III	II	I
Terminals	2-3		1-2
connected:	5-6		4-5

* Function 4: SP in DP case. see diagram at end of section.

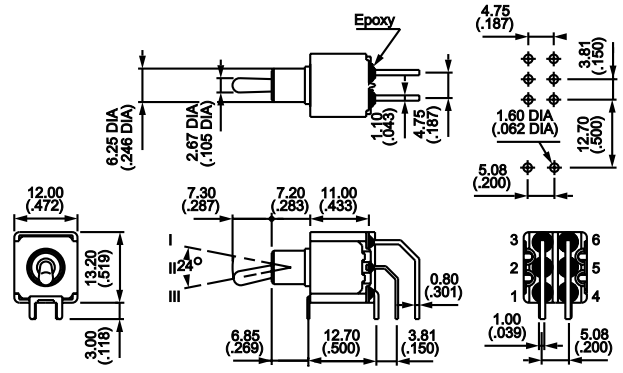

Three pole - short actuator - 1/4" smooth bushing - vertical right angle p.c. terminals - gold contacts



MODEL NO.	CIRCUIT		
5256WWCDB16X514	ON	-	ON
5259WWCDB16X514	ON	OFF	ON
5257WWCDB16X514	MOM	OFF	MOM
5258WWCDB16X514	ON	OFF	MOM
5252WWCDB16X514	ON	-	MOM
Handle position:	III	II	I
Terminals	2-3		1-2
connected:	5-6		4-5
	8-9		7-8

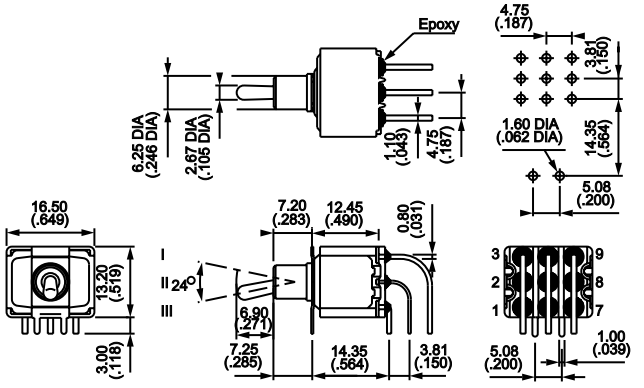

Four pole - short actuator - 1/4" smooth bushing - vertical right angle p.c. terminals - gold contacts



MODEL NO.	CIRCUIT		
5266WWCDB16X514	ON	-	ON
5269WWCDB16X514	ON	OFF	ON
5267WWCDB16X514	MOM	OFF	MOM
5268WWCDB16X514	ON	OFF	MOM
5262WWCDB16X514	ON	-	MOM
5264WWTHCDB16X514*	ON	ON	ON
5264WWTH1RCDB16X514*	ON	ON	MOM
5264WWTH2RCDB16X514*	MOM	ON	MOM
Handle position:	III	II	I
Terminals	2-3		1-2
connected:	5-6		4-5
	8-9		7-8
	11-12		10-11

* Function 4: SP in DP case. see diagram at end of section.

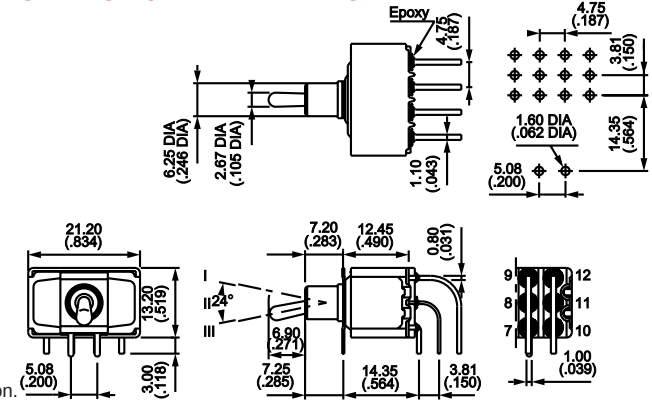

Single pole - short actuator - 1/4" smooth bushing - straight p.c. terminals - bracket mtg. - gold contacts



MODEL NO.	CIRCUIT		
5236YCDB16X445	ON	-	ON
5239YCDB16X445	ON	OFF	ON
5237YCDB16X445	MOM	OFF	MOM
5238YCDB16X445	ON	OFF	MOM
5232YCDB16X445	ON	-	MOM
Handle position (see dwg.):	III	II	I
Terminals connected:	2-3		1-2

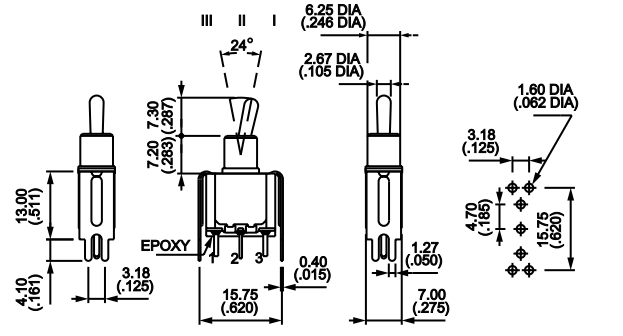

SPECIFICATIONS SUBJECT TO CHANGE WITHOUT NOTICE

5000 SERIES - MINIATURE TOGGLE SWITCHES

SPECIFICATIONS SUBJECT TO CHANGE WITHOUT NOTICE

Double pole - short actuator - 1/4" smooth bushing - straight p.c. terminals - bracket mtg. - gold contacts



MODEL NO.	CIRCUIT		
5246YCDB16X445	ON	-	ON
5249YCDB16X445	ON	OFF	ON
5247YCDB16X445	MOM	OFF	MOM
5248YCDB16X445	ON	OFF	MOM
5242YCDB16X445	ON	-	MOM
5244YTHCDB16X445*	ON	ON	ON
5244YTH1RCDB16X445*	ON	ON	MOM
5244YTH2RCDB16X445*	MOM	ON	MOM
Handle position:	III	II	I
Terminals connected:	2-3		1-2
	5-6		4-5

* Function 4: SP in DP case. see diagram at end of section.

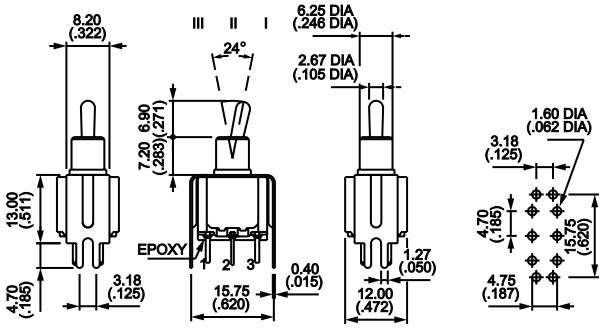

Single pole - paddle actuator - 1/4" threaded bushing - solder lug terminals - silver contacts



MODEL NO.	CIRCUIT		
5636AB4N+U242N	ON	-	ON
5639AB4N+U242N	ON	OFF	ON
5637AB4N+U242N	MOM	OFF	MOM
5638AB4N+U242N	ON	OFF	MOM
5632AB4N+U242N	ON	-	MOM
Handle position:	III	II	I
Terminals connected:	2-3		1-2

Above models have black paddle.

→ Keyway

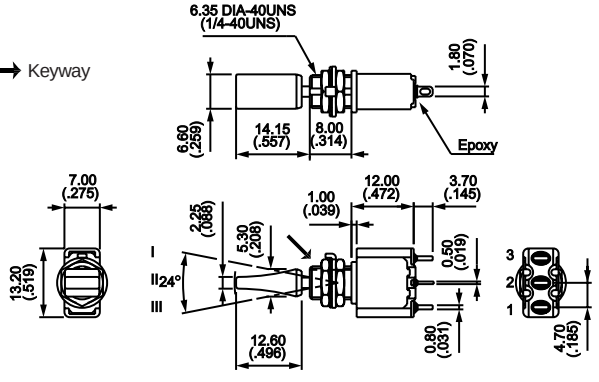

Double pole - paddle actuator - 1/4" threaded bushing - solder lug terminals - silver contacts



MODEL NO.	CIRCUIT		
5646AB4N+U242N	ON	-	ON
5649AB4N+U242N	ON	OFF	ON
5647AB4N+U242N	MOM	OFF	MOM
5648AB4N+U242N	ON	OFF	MOM
5642AB4N+U242N	ON	-	MOM
5644THAB4N+U242N*	ON	ON	ON
5644TH1RAB4N+U242N*	ON	ON	MOM
5644TH2RAB4N+U242N*	MOM	ON	MOM
Handle position:	III	II	I
Terminals connected:	2-3		1-2
	5-6		4-5

*Function 4: SP in DP case. see diagram at end of section
Above models have black paddle.

→ Keyway

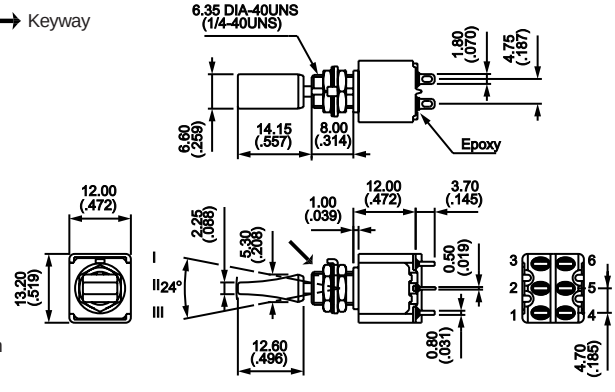

5000 SERIES - MINIATURE TOGGLE SWITCHES

5000 Series switches for peak currents

- 2-120 amps at 60 VDC - 10,000 cycles minimum.
- 3-40 amps at 125/250 VAC - 10,000 cycles minimum.
- Silver nickel alloy (AgNi) contacts.

Other specifications same as 5000 Series.
Also see 'Switches for Peak Currents' technical page in rear of catalog.

SPECIFICATIONS SUBJECT TO CHANGE WITHOUT NOTICE

Single pole - standard actuator - 1/4-40 threaded bushing - solder lug terminals



MODEL NO.	CIRCUIT
5636ABX814	ON - ON

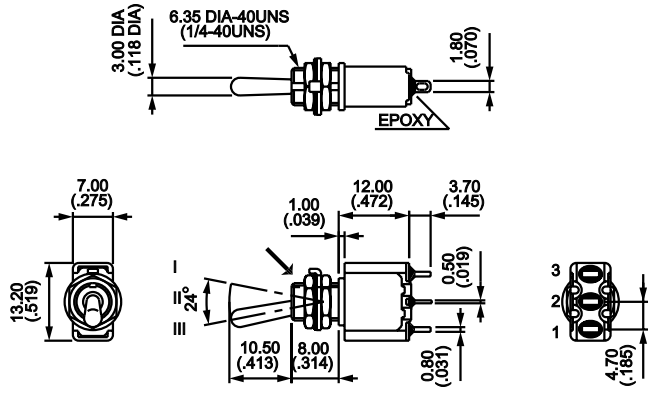

→ Keyway

Double pole - standard actuator - 1/4-40 threaded bushing - solder lug terminals



MODEL NO.	CIRCUIT
5646ABX814	ON - ON

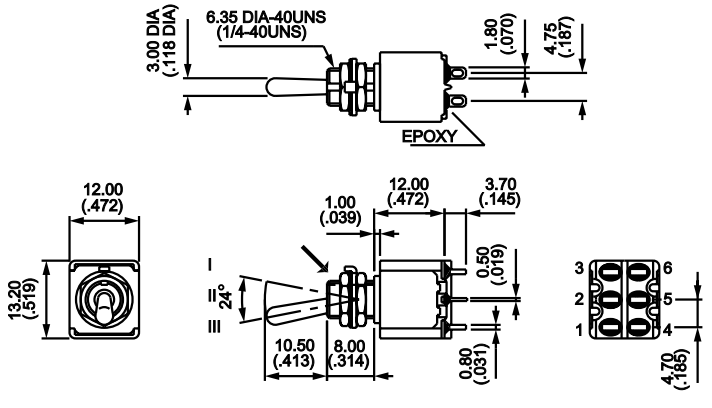

→ Keyway

5000 SERIES - MINIATURE TOGGLE SWITCHES

SPECIFICATIONS SUBJECT TO CHANGE WITHOUT NOTICE

Additional ordering information: Commonly ordered models are shown on prior pages with complete model numbers and specifications. Below is an order format that enables you to 'build your own switch' and specify the correct switch model number by simply selecting from all available options shown and filling in the boxes.

'BUILD YOUR OWN SWITCH' ORDER FORMAT

Fill in boxes with selections shown for **Model Structure**, then add **Options** selections for complete model number.
Allowable options are shown below each respective box.
Note 'NONE' indicates box may be left empty.

Model Structure:

Series

5

Terminals & bushings

2 Straight p.c.,right angle, quick connect or wire-wrap terminals with 1/4-40 (6.35mm) threaded bushing.
6 Solder lug terminals with 1/4-40 (6.35mm) or 15/32-32 (11.9mm) threaded bushings.

Number of poles

3 Single pole
4 Double pole
5 Three pole
6 Four pole

Electrical functions

6	ON	-	ON
9	ON	OFF	ON
7	MOM	OFF	MOM
8	ON	OFF	MOM
2	ON	-	MOM
4*	ON	ON	ON
4*	ON	0N	MOM
4*	MOM	ON	MOM

* specify selection from 'connections/ functions' box also.

Terminals

(NONE)
M Solder lugs with 15/32-32 (11.9mm) bushing
M I W R Wire-wrap (epoxy term. seal standard)
W Horizontal right angle p.c.
W W Vertical right angle p.c.
Y Straight p.c. w/mounting brk't.
Z Quick connect (epoxy term. seal standard)

(For function 4 models only) connections /functions

(NONE)

T H	ON	ON	ON
T H 1 R	ON	ON	MOM
T H 2 R	MOM	ON	MOM

Contact materials

A Silver
A D Silver, gold plated
C D Brass, gold plated

Options:

Black finish

(NONE)
G Matte black finish on bushing, actuator & hardware.

Sealing

(NONE) Unless standard - (see Terminals above)
B Epoxy sealed terminals
K Front panel sealing with o-ring & gasket.
K B Both of above

Examples of completely specified model numbers:
5636AB, 5234WWTH2RAB16UL

Actuators

(NONE)
1 3 Standard
2
7
8 Flat
9 Flat
1 2 Flat
1 6
1 7
2 1 Insulated
2 2
2 3
2 4 Large (long)
2 7 Large (short)
4 N For paddles only
1 V Locking (1 position)
2 V Locking (2 positions)
3 V Locking (3 positions)
(see actuator drawings).

Agency Recognition

(NONE)
U L
C S A
V D E
L N Z Telecommunications listing
G A M Military listing
(consult factory for details of approved models).

Special options

(NONE)
See listing on pg. C39

Caps and paddles

(NONE)
Caps
U 2 7 0
U 1 7 1 0
U 6 4 0
Paddles
U 2 4 0 N
U 2 9 0 N
U 3 9 0 N
(see drawings and color codes).

Although most combinations of options are available, some may result in incompatibilities. Consult factory if there is any question.

5000 SERIES - MINIATURE TOGGLE SWITCHES

OPTION DRAWINGS

SEALING

(NONE) Indicates no terminal sealing.

B Indicates epoxy terminal sealing. Note: for models with '**Z**' and '**MIWR**' epoxy terminal sealing is standard and need not be specified with '**B**'.

K Indicates front panel sealing with o-ring (1) and gasket (2) to protect the switch from water and dust. Withstands 1 bar pressure. Available on models with 1/4" (6.35mm) or 15/32" (11.9mm) threaded bushings. Not available with actuators **8,9, 12, 22** or **23.**

K B Includes both **B** and **K** above.

K with 1/4" (6.35mm) keyway bushing

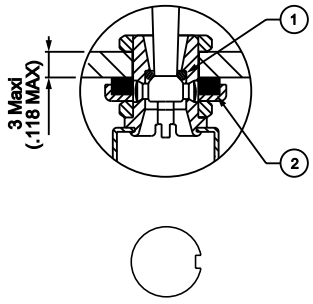

Includes gasket washer **U360**

K with 15/32" (11.9mm) flatted bushing

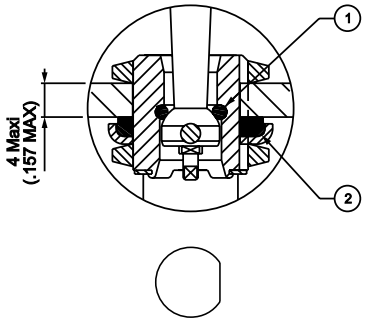

Includes gasket washer **U60**

ACTUATORS for 1/4" (6.35mm) threaded bushings

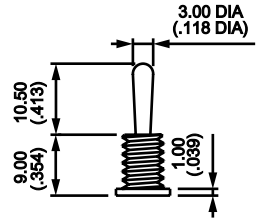

13 Standard

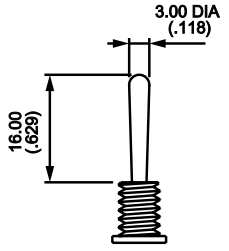

2

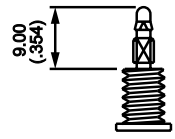

4N For use with paddles only

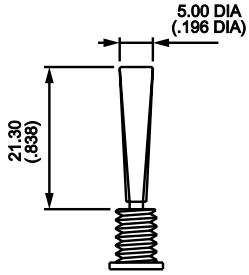

8 Not available with option **K**

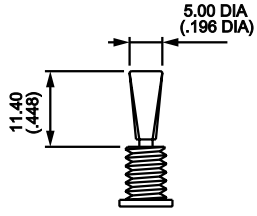

9 Not available with option **K**

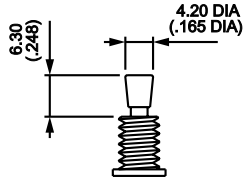

12 Not available with option **K**

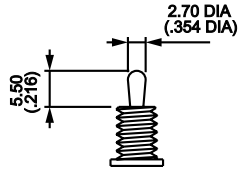

16

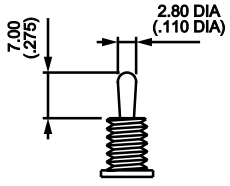

17

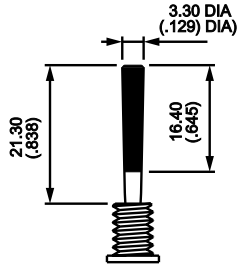

21 Specify **U640** insulative extension with this actuator and replace '0' with color selection below.

Colors

1	blue
2	black
3	green
4	grey
5	yellow
6	red
7/1	white
9	orange

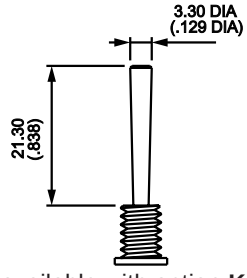

22 Not available with option **K**

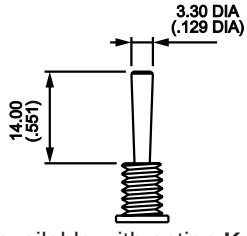

23 Not available with option **K**

SPECIFICATIONS SUBJECT TO CHANGE WITHOUT NOTICE

SPECIFICATIONS SUBJECT TO CHANGE WITHOUT NOTICE

OPTION DRAWINGS (cont'd.)

ACTUATORS for 15/32" (11.9mm) threaded bushings

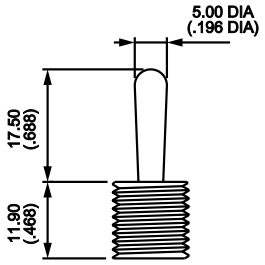

24

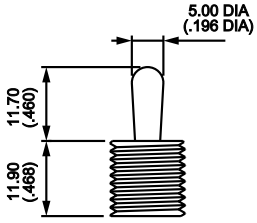

27

LOCKING ACTUATORS for 1/4" (6.35mm) threaded bushings

Other locking actuator styles available - consult factory.

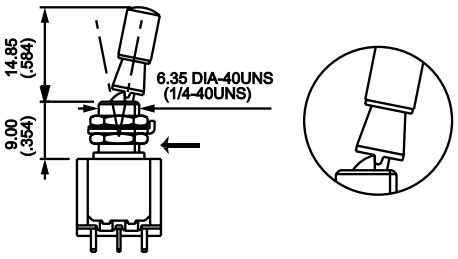

1V 1 locked position (function 6)

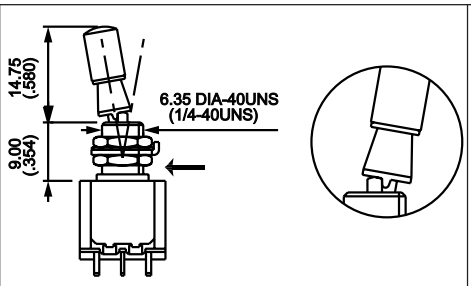

2V 2 locked positions (function 6)

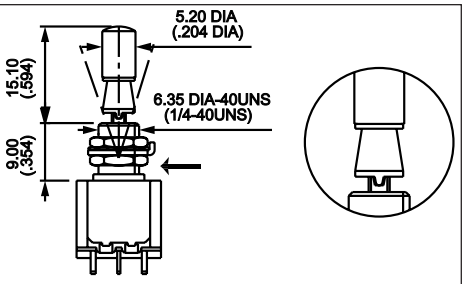

3V 3 locked positions (functions 9 & 4)

ACTUATORS for smooth bushing models (W, WW & Y)

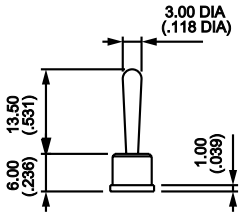

13 Standard

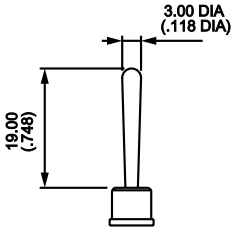

2

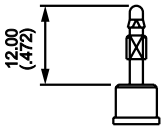

4N For use with paddles only

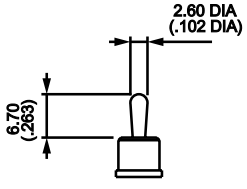

7

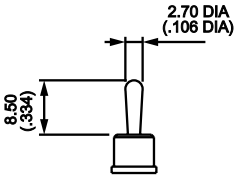

16

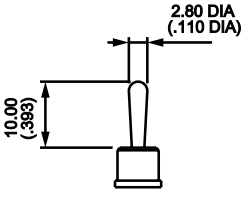

17

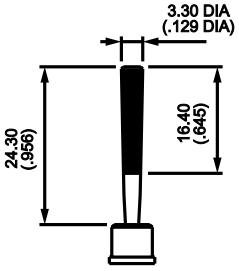

21 Specify **U640** insulative extension with this actuator and replace '0' with color selection.

Colors

1	blue
2	black
3	green
4	grey
5	yellow
6	red
7/1	white
9	orange

Note that for switches with mounting brackets, the actuator length may be reduced by .015" (0.4mm). Refer to individual switch drawings. '

5000 SERIES - MINIATURE TOGGLE SWITCHES

OPTION DRAWINGS (cont'd.)

ACTUATORS for switches with X404 and X445 options (see 'special options' pages following)

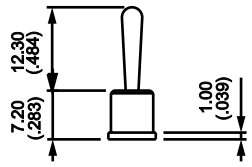

13 Standard

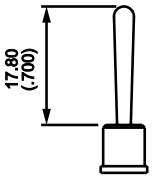

2

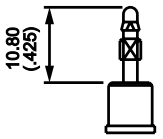

4N For use with paddles only

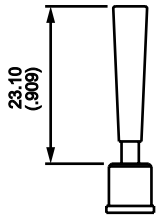

8 Not available w/function 2 (ON - MOM)

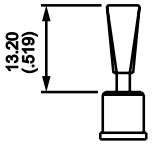

9 Not available w/function 2 (ON - MOM)

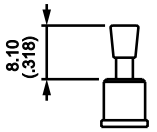

12 Not available w/function 2 (ON - MOM)

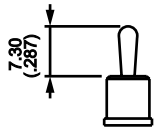

16

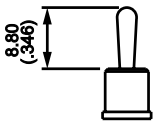

17

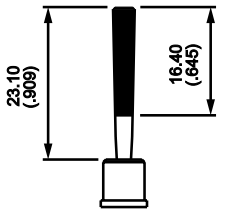

21 Specify **U640** insulative extension with this actuator and replace '0' with color selection below.

Colors

1	blue
2	black
3	green
4	grey
5	yellow
6	red
7/1	white
9	orange

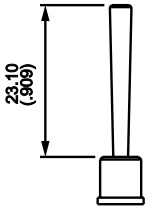

22 Not available with sealing option K or X408

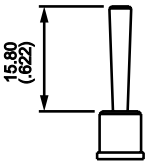

23

INSULATING CAPS (replace '0' in part numbers below with color code)

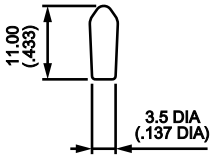

U270 For actuator **13** and threaded bushing only

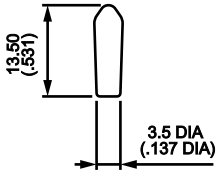

U1040 For actuator **13** and smooth bushing only

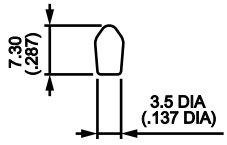

U1710 For actuator **17** and threaded bushing or actuator **7** and smooth bushing only

SPECIFICATIONS SUBJECT TO CHANGE WITHOUT NOTICE

SPECIFICATIONS SUBJECT TO CHANGE WITHOUT NOTICE

OPTION DRAWINGS (cont'd.)

PADDLES for actuator 4N only. Mat'l: UL94HB Polyamide (replace '0' in part numbers below with color code from preceeding pg.)

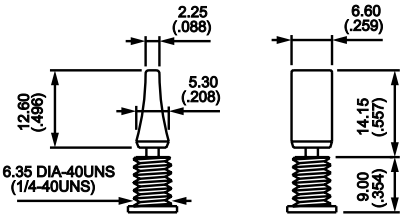

U240N

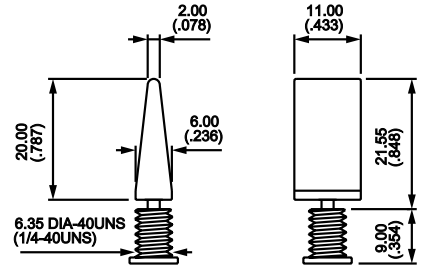

U290N

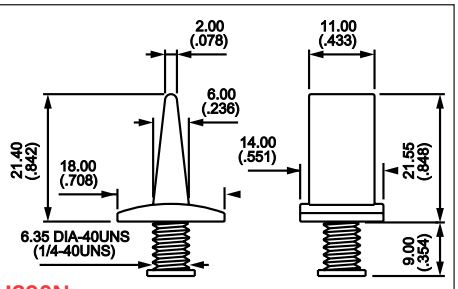

U390N

SPECIAL OPTIONS

F Tin plated terminals (for p.c. terminals only).

X371 Smooth bushing .246" (6.25mm) instead of standard threaded bushing.

X372 Threaded bushing 1/4" (6.35mm). Height .274" (7mm).

X386 Threaded bushing 1/4" (6.35mm) to replace plain bushing on models with **W, WW** & **Y**.

X404 Switches with **W** option with short actuator and offset terminal bends (see Page A25).

X435 .732" (18.6mm) long p.c. terminals - epoxy terminal seal standard.

X438 Smooth bushing .246" (6.25mm). Height.283" (7.2mm) without shoulder.

X442 Threaded bushing 1/4" (6.35mm). Height .389" (9.9mm).

X445 Smooth bushing .283" (7.2mm) for **W, WW** & **Y** models. Available with same actuators, insulating cap and paddles as X404.

X500 Threaded bushing 1/4" (6.35mm). Height .354" (9mm) without shoulder.

X507 .293" (10mm) long p.c. terminals.

X512 1.062" (27mm) long p.c. terminals - epoxy terminal seal standard.

X514 Spacing .564" (14.35mm) instead of .500" (12.7mm) for 3 and 4 pole **WW** models.

X515 Smooth bushing .246" (6.25mm) without shoulder.

X601 Silver plated brass contacts. Ratings - 0.2 amps 250 VAC, 0.4 amps 125 VAC or 0.5 amps 30 VDC. Electrical life : 20,000 cycles min. Minimum quantity: 5000 pcs.

X681 Satin chrome actuator for flat actuators.

X729 1/299" (33mm) long p.c. terminals.

X764 Special customer specified marking.

X769 Red anodized locking lever top.

X806 Smooth bushing .246" (6.25mm) instead of standard threaded bushing and silver plated brass contacts.

X814 Switches for peak current. See pg. A28.

X916 Locking lever on model with smooth bushing.

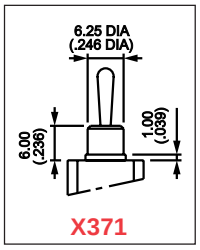

X371

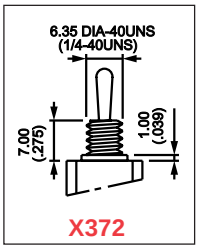

X372

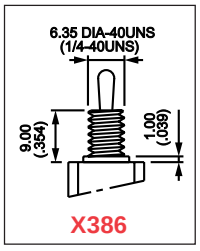

X386

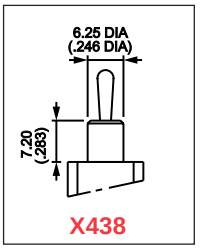

X438

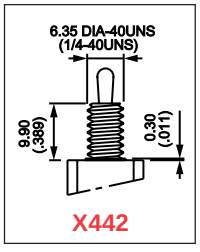

X442

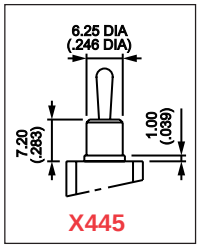

X445

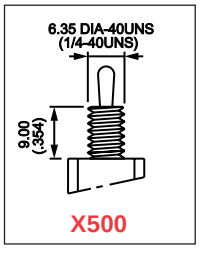

X500

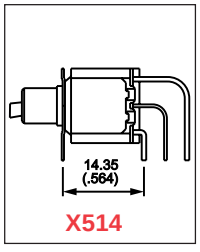

X514

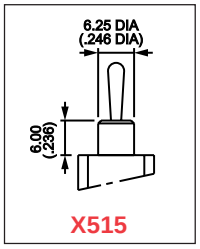

X515

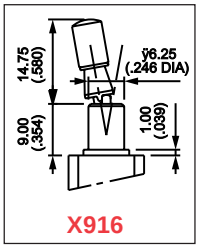

X916

Printed circuit terminal lengths

Option	Length L
X435	.732 (18.6mm)
X507	.293 (10mm)
X512	1.062 (27mm)
X729	1.299 (33mm)

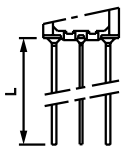

5000 SERIES - MINIATURE TOGGLE SWITCHES

PANEL CUT-OUTS & MISCELLANEOUS

PANEL CUT-OUTS for 1/4" (6.35mm) bushings

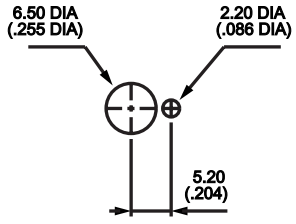

Standard (with locking ring supplied)

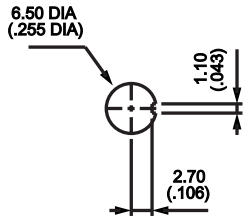

With K sealing option

PANEL CUT-OUTS for 15/32" (11.9mm) bushings

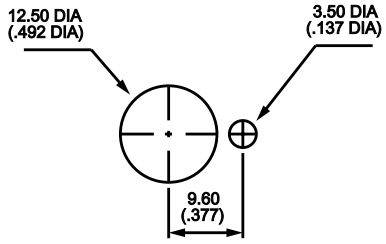

Standard (with locking ring supplied)

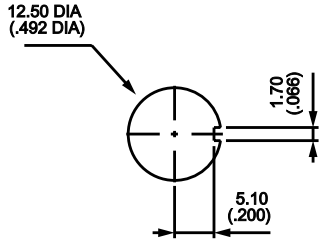

With K sealing option

WIRING for function 4 switch

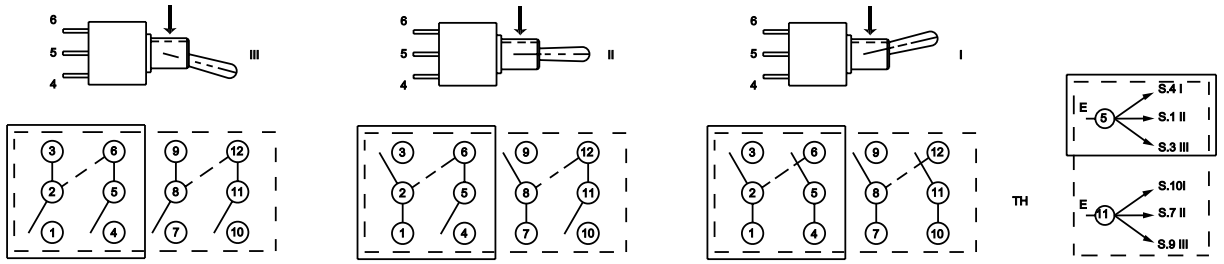

Above diagrams are viewed from bottom of switch.

Equivalent to single pole 3 throw switch. Dotted lines between terminals 2 & 6 and 8 & 12 indicate external jumpers to be added by customer.

SPECIFICATIONS SUBJECT TO CHANGE WITHOUT NOTICE